Towards Thousand-Core RISC-V Shared Memory Systems

Quan Nguyen (qmn@mit.edu)
Massachusetts Institute of Technology

30 November 2016

Outline

- **The Tardis cache coherence protocol**
  - Example
  - Scalability advantages
- Thousand-core prototype
- RISC-V and Tardis

Tardis

Tardis

- Scalable cache coherence protocol

Tardis

- Scalable cache coherence protocol
  - N-core system: **O(log N)** storage

Tardis

- Scalable cache coherence protocol
  - N-core system: **O(log N)** storage
- Enforces consistency through timestamps

Tardis

- Scalable cache coherence protocol
  - N-core system: **O(log N)** storage
- Enforces consistency through timestamps
- Key idea: logical leases

Tardis

- Scalable cache coherence protocol
  - N-core system: **O(log N)** storage
- Enforces consistency through timestamps
- Key idea: logical leases
  - Can read if have valid lease

Tardis

- Scalable cache coherence protocol
  - N-core system: **O(log N)** storage
- Enforces consistency through timestamps
- Key idea: logical leases
  - Can read if have valid lease
  - Can write if lease expires

Block diagram

Block diagram

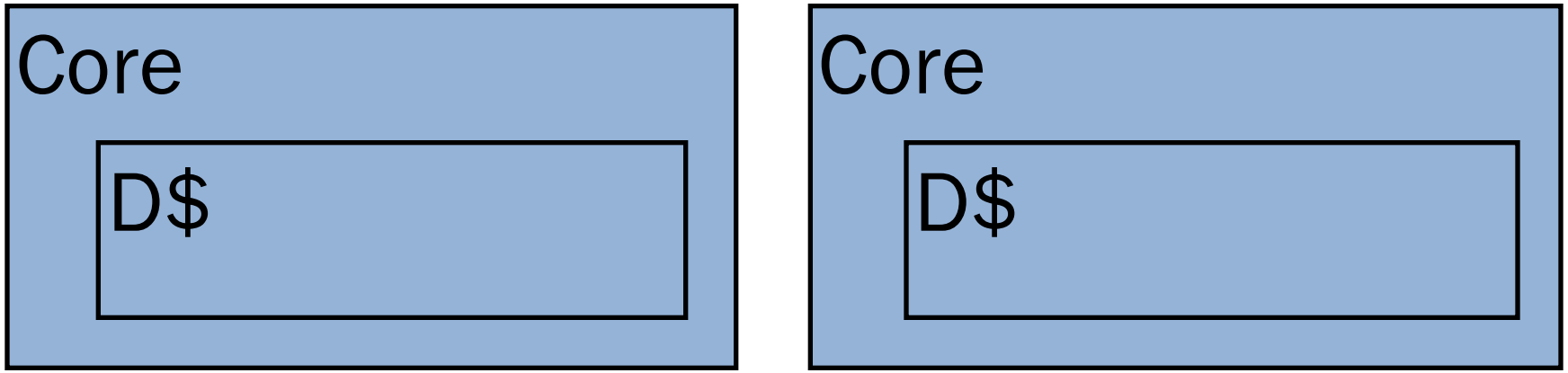

Block diagram

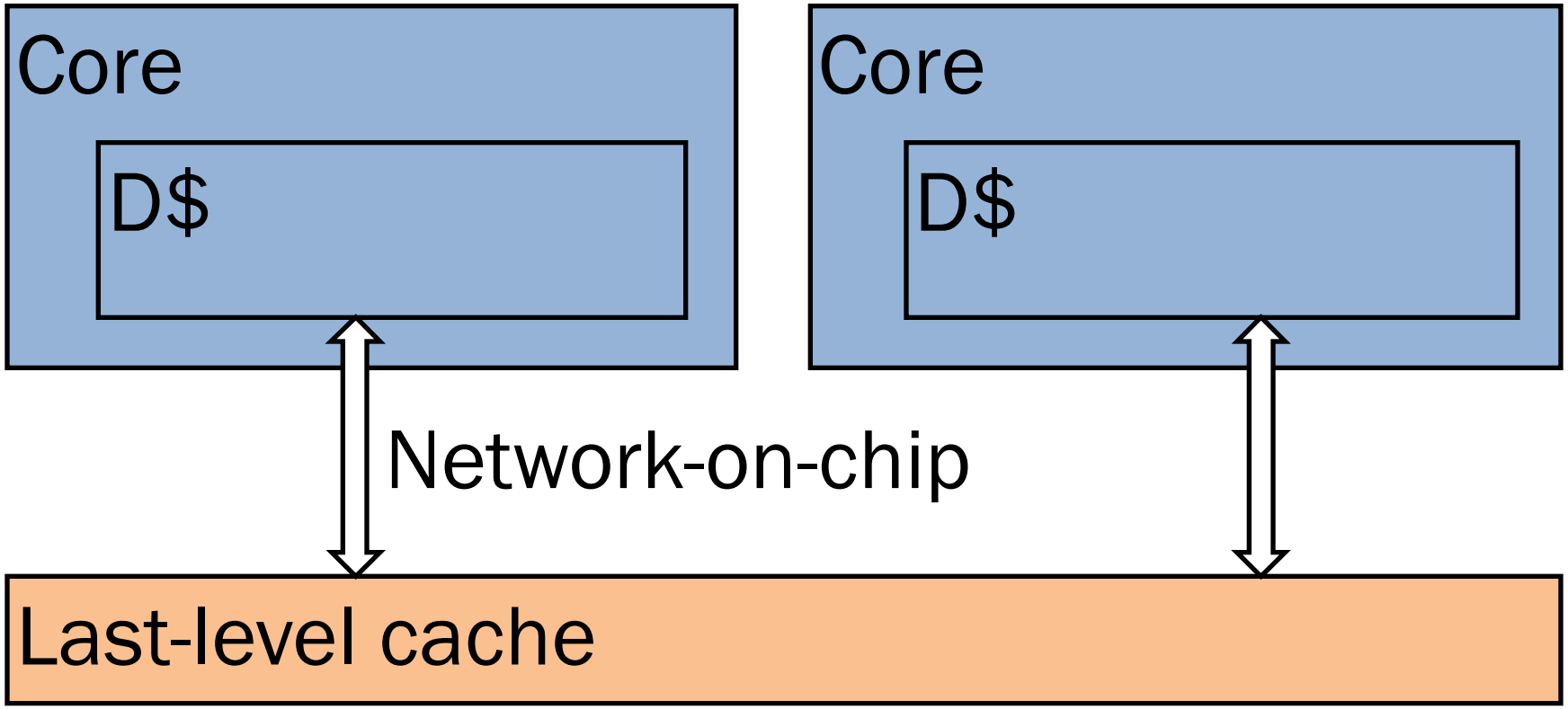

Block diagram

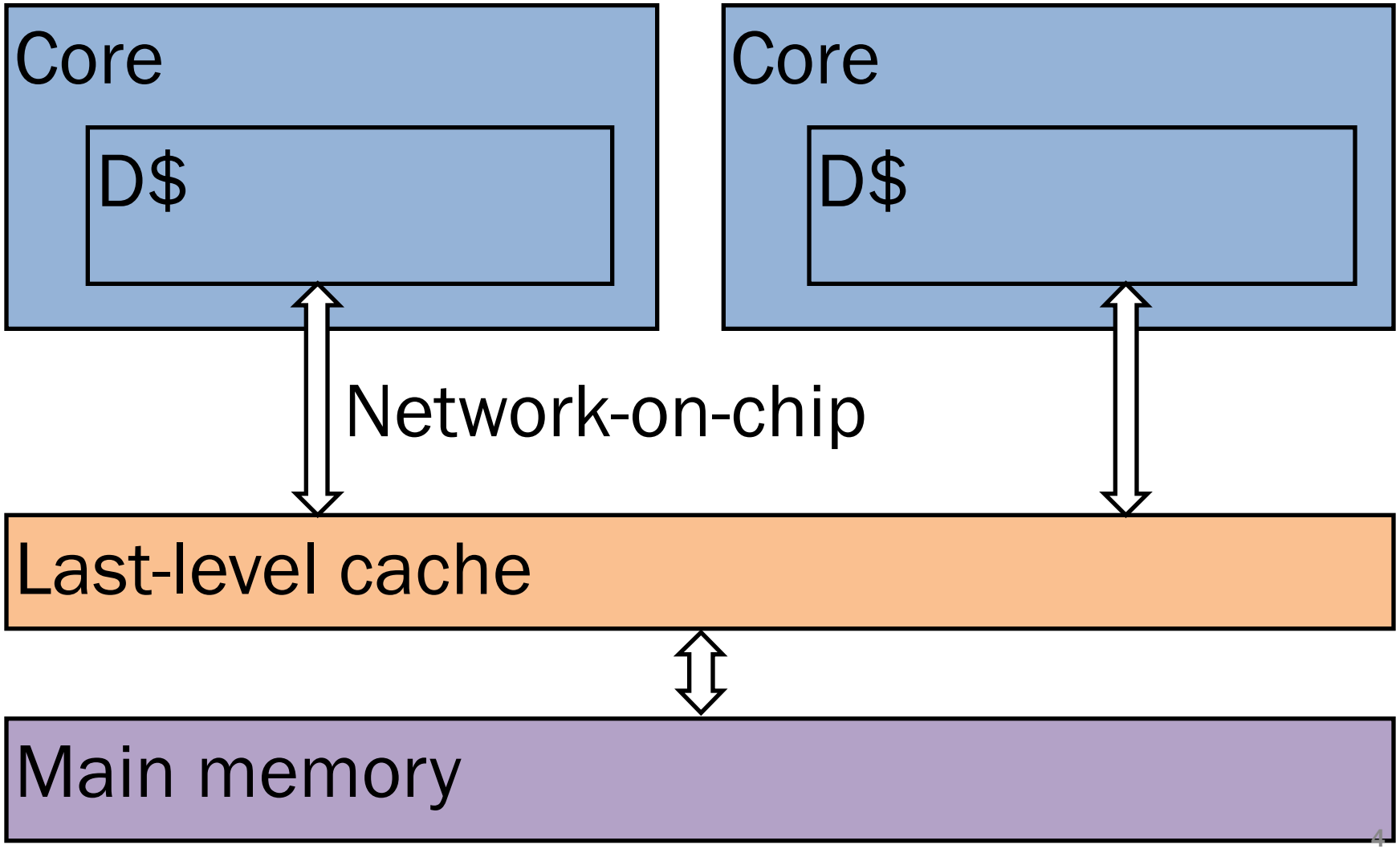

New state

New state

- Per cache line:

New state

- Per cache line:
  - Client:

tag	state	wts	rts

New state

- Per cache line:
  - Client:

tag	state	wts	rts

  - Manager:

tag	state	owner	wts	rts

New state

- Per cache line:
  - Client:

tag	state	wts	rts

  - Manager:

tag	state	owner	wts	rts

- Per core:

pts

Example

```
Core 0:          Core 1:
  store A
  load  B
                   store B
                   load  A
  load  B
```

Example

Example

```
Core 0:          Core 1:
  store A
  load  B
                   store B
                   load  A
  load  B
```

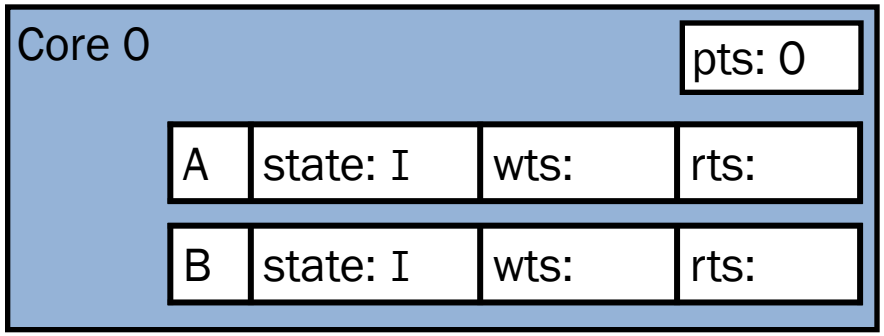

Example

```
Core 0:          Core 1:
  store A
  load  B
                   store B
                   load  A
  load  B
```

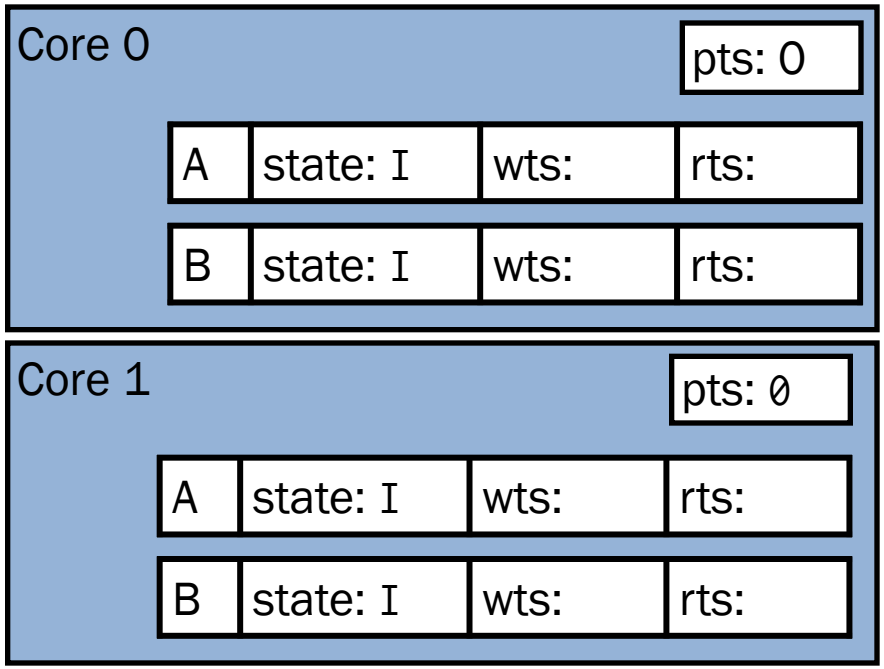

Example

```
Core 0:          Core 1:
  store A
  load  B
                   store B
                   load  A
  load  B
```

Core 0

pts: 0

A	state: I	wts:	rts:
B	state: I	wts:	rts:

Core 1

pts: 0

A	state: I	wts:	rts:
B	state: I	wts:	rts:

Manager

A	state: I	owner:	wts: 0	rts: 0
B	state: I	owner:	wts: 0	rts: 0

Example

```
Core 0:          Core 1:
  store A
  load  B
                   store B
                   load  A
  load  B
```

Core 0 — pts: 0

A	state: I	wts:	rts:
B	state: I	wts:	rts:

Core 1 — pts: 0

A	state: I	wts:	rts:
B	state: I	wts:	rts:

Manager

A	state: I	owner:	wts: 0	rts: 0
B	state: I	owner:	wts: 0	rts: 0

```
Core 0:          Core 1:
  store A
  load  B
                   store B
                   load  A
  load  B
```

Core 0

pts: 0

A	state: I	wts:	rts:
B	state: I	wts:	rts:

Core 1

pts: 0

A	state: I	wts:	rts:
B	state: I	wts:	rts:

Manager

A	state: I	owner:	wts: 0	rts: 0
B	state: I	owner:	wts: 0	rts: 0

Example

- Core 0 stores A

```
Core 0:          Core 1:
  store A
  load  B
                   store B
                   load  A
  load  B
```

Core 0

pts: 0

A	state: I	wts:	rts:
B	state: I	wts:	rts:

Core 1

pts: 0

A	state: I	wts:	rts:
B	state: I	wts:	rts:

Manager

A	state: M	owner: 0	wts: 0	rts: 0
B	state: I	owner:	wts: 0	rts: 0

Example

- Core 0 stores A
- Manager leases A

```
Core 0:          Core 1:
  store A
  load  B
                   store B
                   load  A
  load  B
```

Core 0

pts: 0

A	state: I	wts:	rts:
B	state: I	wts:	rts:

Core 1

pts: 0

A	state: I	wts:	rts:
B	state: I	wts:	rts:

Manager

A	state: M	owner: 0	wts: 0	rts: 0
B	state: I	owner:	wts: 0	rts: 0

Example

- Core 0 stores A
- Manager leases A
  - Sets owner, wts, rts

```
Core 0:          Core 1:
  store A
  load  B
                   store B
                   load  A
  load  B
```

Core 0

pts: 0

A	state: I	wts:	rts:
B	state: I	wts:	rts:

Core 1

pts: 0

A	state: I	wts:	rts:
B	state: I	wts:	rts:

Manager

A	state: M	owner: 0	wts: 0	rts: 0
B	state: I	owner:	wts: 0	rts: 0

Example

- Core 0 stores A
- Manager leases A
  - Sets owner, wts, rts
- Core 0:

```
Core 0:          Core 1:
  store A
  load  B
                   store B
                   load  A
  load  B
```

Core 0

pts: 0

A	state: M	wts: 0	rts: 0
B	state: I	wts:	rts:

Core 1

pts: 0

A	state: I	wts:	rts:
B	state: I	wts:	rts:

Manager

A	state: M	owner: 0	wts: 0	rts: 0
B	state: I	owner:	wts: 0	rts: 0

Example

- Core 0 stores A
- Manager leases A
  - Sets owner, wts, rts
- Core 0:
  - Gets A with [wts, rts] = [0, 0]

```
Core 0:          Core 1:
  store A
  load  B
                   store B
                   load  A
  load  B
```

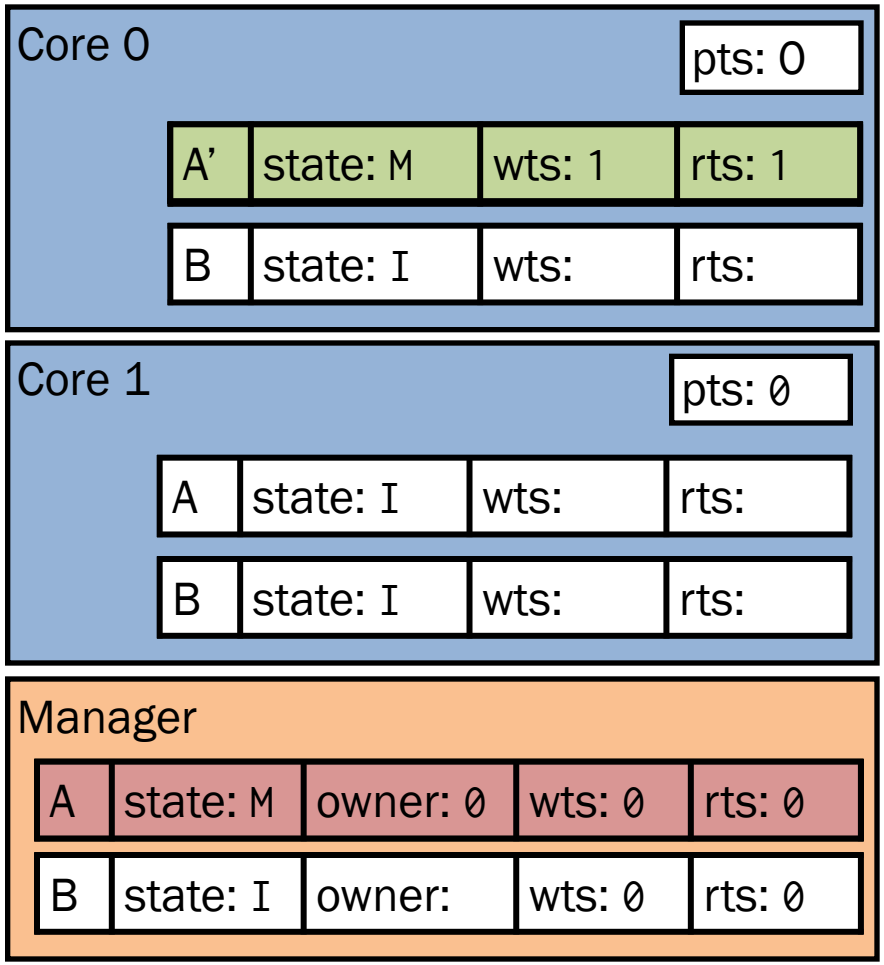

Example

- Core 0 stores A
- Manager leases A
  - Sets owner, wts, rts
- Core 0:
  - Gets A with [wts, rts] = [0, 0]
  - Writes A’, creates new version at [1, 1]

```
Core 0:          Core 1:
  store A
  load  B
                   store B
                   load  A
  load  B
```

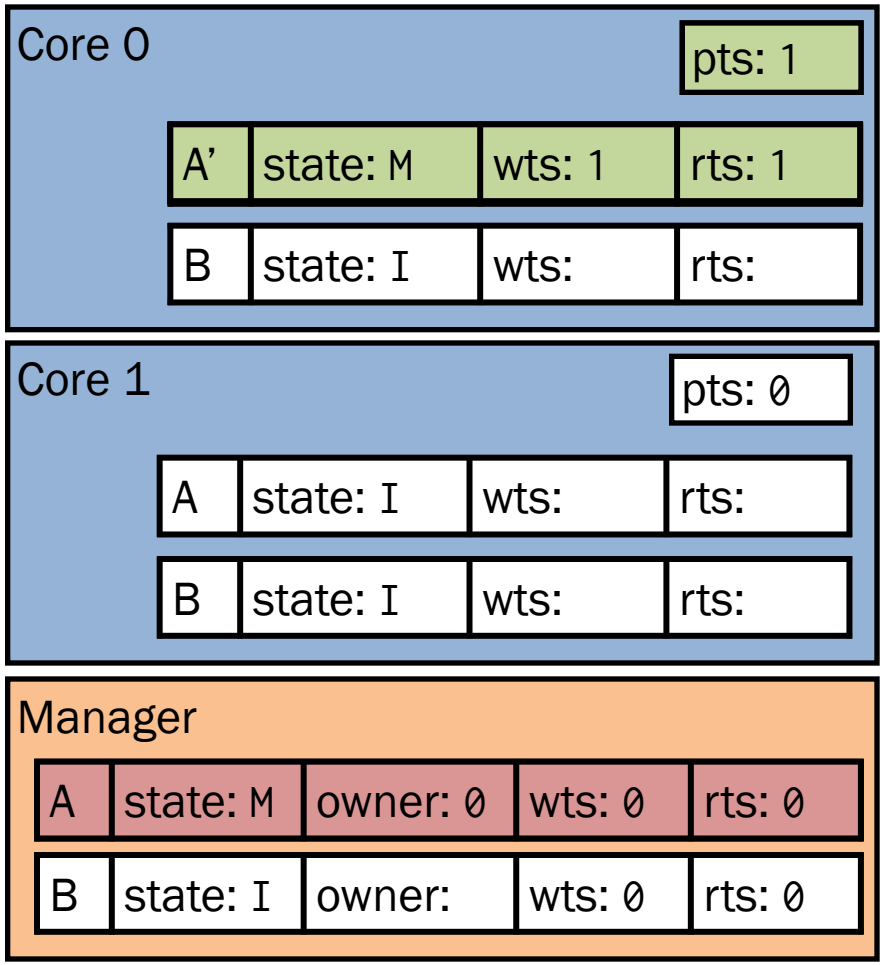

Example

- Core 0 stores A
- Manager leases A
  - Sets owner, wts, rts
- Core 0:
  - Gets A with [wts, rts] = [0, 0]
  - Writes A', creates new version at [1, 1]
  - Updates its pts to 1

Example

```
Core 0:          Core 1:
  store A
  load  B
                   store B
                   load  A
  load  B
```

Core 0 — pts: 1

A’	state: M	wts: 1	rts: 1
B	state: I	wts:	rts:

Core 1 — pts: 0

A	state: I	wts:	rts:
B	state: I	wts:	rts:

Manager

A	state: M	owner: 0	wts: 0	rts: 0
B	state: I	owner:	wts: 0	rts: 0

```
Core 0:          Core 1:
  store A
  load  B
                   store B
                   load  A
  load  B
```

Core 0

pts: 1

A’	state: M	wts: 1	rts: 1
B	state: I	wts:	rts:

Core 1

pts: 0

A	state: I	wts:	rts:
B	state: I	wts:	rts:

Manager

A	state: M	owner: 0	wts: 0	rts: 0
B	state: I	owner:	wts: 0	rts: 0

Example

- Core 0 loads B

```
Core 0:          Core 1:
  store A
  load  B
                   store B
                   load  A
  load  B
```

Core 0

pts: 1

A’	state: M	wts: 1	rts: 1
B	state: I	wts:	rts:

Core 1

pts: 0

A	state: I	wts:	rts:
B	state: I	wts:	rts:

Manager

A	state: M	owner: 0	wts: 0	rts: 0
B	state: I	owner:	wts: 0	rts: 0

Example

- Core 0 loads B
  - Sends pts to manager

```
Core 0:          Core 1:
  store A
  load  B
                   store B
                   load  A
  load  B
```

Core 0

pts: 1

A’	state: M	wts: 1	rts: 1
B	state: I	wts:	rts:

Core 1

pts: 0

A	state: I	wts:	rts:
B	state: I	wts:	rts:

Manager

A	state: M	owner: 0	wts: 0	rts: 0
B	state: S	owner:	wts: 1	rts: 11

Example

- Core 0 loads B
  - Sends pts to manager
- Manager leases B

```
Core 0:          Core 1:
  store A
  load  B
                   store B
                   load  A
  load  B
```

Core 0

pts: 1

A’	state: M	wts: 1	rts: 1
B	state: I	wts:	rts:

Core 1

pts: 0

A	state: I	wts:	rts:
B	state: I	wts:	rts:

Manager

A	state: M	owner: 0	wts: 0	rts: 0
B	state: S	owner:	wts: 1	rts: 11

Example

- Core 0 loads B
  - Sends pts to manager
- Manager leases B
  - Sets lease based on pts

```
Core 0:          Core 1:
  store A
  load  B
                   store B
                   load  A
  load  B
```

Core 0

pts: 1

A’	state: M	wts: 1	rts: 1
B	state: I	wts:	rts:

Core 1

pts: 0

A	state: I	wts:	rts:
B	state: I	wts:	rts:

Manager

A	state: M	owner: 0	wts: 0	rts: 0
B	state: S	owner:	wts: 1	rts: 11

Example

- Core 0 loads B
  - Sends pts to manager
- Manager leases B
  - Sets lease based on pts
  - [wts, rts] = [1, 11]

```
Core 0:          Core 1:
  store A
  load  B
                   store B
                   load  A
  load  B
```

Core 0

pts: 1

A'	state: M	wts: 1	rts: 1
B	state: S	wts: 1	rts: 11

Core 1

pts: 0

A	state: I	wts:	rts:
B	state: I	wts:	rts:

Manager

A	state: M	owner: 0	wts: 0	rts: 0
B	state: S	owner:	wts: 1	rts: 11

Example

- Core 0 loads B
  - Sends pts to manager
- Manager leases B
  - Sets lease based on pts
  - [wts, rts] = [1, 11]
- Core 0 reads B at pts 1

Example

```
Core 0:          Core 1:
  store A
  load  B
                   store B
                   load  A
  load  B
```

Core 0 — pts: 1

A’	state: M	wts: 1	rts: 1
B	state: S	wts: 1	rts: 11

Core 1 — pts: 0

A	state: I	wts:	rts:
B	state: I	wts:	rts:

Manager

A	state: M	owner: 0	wts: 0	rts: 0
B	state: S	owner:	wts: 1	rts: 11

```
Core 0:          Core 1:
  store A
  load  B
                   store B
                   load  A
  load  B
```

Core 0

pts: 1

A’	state: M	wts: 1	rts: 1
B	state: S	wts: 1	rts: 11

Core 1

pts: 0

A	state: I	wts:	rts:
B	state: I	wts:	rts:

Manager

A	state: M	owner: 0	wts: 0	rts: 0
B	state: S	owner:	wts: 1	rts: 11

Example

- Core 1 stores B

```
Core 0:          Core 1:
  store A
  load  B
                   store B
                   load  A
  load  B
```

Core 0

pts: 1

A’	state: M	wts: 1	rts: 1
B	state: S	wts: 1	rts: 11

Core 1

pts: 0

A	state: I	wts:	rts:
B	state: I	wts:	rts:

Manager

A	state: M	owner: 0	wts: 0	rts: 0
B	state: M	owner: 1	wts: 1	rts: 11

Example

- Core 1 stores B
  - Sends pts to manager

```
Core 0:          Core 1:
  store A
  load  B
                   store B
                   load  A
  load  B
```

Core 0

pts: 1

A’	state: M	wts: 1	rts: 1
B	state: S	wts: 1	rts: 11

Core 1

pts: 0

A	state: I	wts:	rts:
B’	state: M	wts: 12	rts: 12

Manager

A	state: M	owner: 0	wts: 0	rts: 0
B	state: M	owner: 1	wts: 1	rts: 11

Example

- Core 1 stores B
  - Sends pts to manager
- Instantly grant Core 1 exclusive ownership

```
Core 0:          Core 1:
  store A
  load  B
                   store B
                   load  A
  load  B
```

Core 0

			pts: 1
A’	state: M	wts: 1	rts: 1
B	state: S	wts: 1	rts: 11

Core 1

			pts: 12
A	state: I	wts:	rts:
B’	state: M	wts: 12	rts: 12

Manager

A	state: M	owner: 0	wts: 0	rts: 0
B	state: M	owner: 1	wts: 1	rts: 11

Example

- Core 1 stores B
  - Sends pts to manager
- Instantly grant Core 1 exclusive ownership
- Core 1 writes B’ at pts 12

```
Core 0:          Core 1:
  store A
  load  B
                   store B
                   load  A
  load  B
```

Core 0

pts: 1

A’	state: M	wts: 1	rts: 1
B	state: S	wts: 1	rts: 11

Core 1

pts: 12

A	state: I	wts:	rts:
B’	state: M	wts: 12	rts: 12

Manager

A	state: M	owner: 0	wts: 0	rts: 0
B	state: M	owner: 1	wts: 1	rts: 11

Example

- Core 1 stores B
  - Sends pts to manager
- Instantly grant Core 1 exclusive ownership
- Core 1 writes B’ at pts 12
- Different versions of B coexist!

Example

```
Core 0:          Core 1:
  store A
  load  B
                   store B
                   load  A
  load  B
```

Core 0 — pts: 1

A’	state: M	wts: 1	rts: 1
B	state: S	wts: 1	rts: 11

Core 1 — pts: 12

A	state: I	wts:	rts:
B’	state: M	wts: 12	rts: 12

Manager

A	state: M	owner: 0	wts: 0	rts: 0
B	state: M	owner: 1	wts: 12	rts: 12

```
Core 0:          Core 1:
  store A
  load  B
                   store B
                   load  A
  load  B
```

Core 0

pts: 1

A’	state: M	wts: 1	rts: 1
B	state: S	wts: 1	rts: 11

Core 1

pts: 12

A	state: I	wts:	rts:
B’	state: M	wts: 12	rts: 12

Manager

A	state: M	owner: 0	wts: 0	rts: 0
B	state: M	owner: 1	wts: 12	rts: 12

Example

- Core 1 loads A

```
Core 0:          Core 1:
  store A
  load  B
                   store B
                   load  A
  load  B
```

Core 0

pts: 1

A’	state: M	wts: 1	rts: 1
B	state: S	wts: 1	rts: 11

Core 1

pts: 12

A	state: I	wts:	rts:
B’	state: M	wts: 12	rts: 12

Manager

A	state: M	owner: 0	wts: 0	rts: 0
B	state: M	owner: 1	wts: 12	rts: 12

Example

- Core 1 loads A
- Manager sends Core 0 writeback request

```
Core 0:          Core 1:
  store A
  load  B
                   store B
                   load  A
  load  B
```

Core 0

pts: 1

A’	state: S	wts: 1	rts: 1
B	state: S	wts: 1	rts: 11

Core 1

pts: 12

A	state: I	wts:	rts:
B’	state: M	wts: 12	rts: 12

Manager

A	state: M	owner: 0	wts: 0	rts: 0
B	state: M	owner: 1	wts: 12	rts: 12

Example

- Core 1 loads A
- Manager sends Core 0 writeback request
- Core 0 downgrades

```
Core 0:          Core 1:
  store A
  load  B
                   store B
                   load  A
  load  B
```

Core 0

pts: 1

A’	state: S	wts: 1	rts: 1
B	state: S	wts: 1	rts: 11

Core 1

pts: 12

A	state: I	wts:	rts:
B’	state: M	wts: 12	rts: 12

Manager

A’	state: S	owner:	wts: 1	rts: 1
B	state: M	owner: 1	wts: 12	rts: 12

Example

- Core 1 loads A
- Manager sends Core 0 writeback request
- Core 0 downgrades

```
Core 0:          Core 1:
  store A
  load  B
                   store B
                   load  A
  load  B
```

Core 0

pts: 1

A’	state: S	wts: 1	rts: 1
B	state: S	wts: 1	rts: 11

Core 1

pts: 12

A	state: I	wts:	rts:
B’	state: M	wts: 12	rts: 12

Manager

A’	state: S	owner:	wts: 12	rts: 22
B	state: M	owner: 1	wts: 12	rts: 12

Example

- Core 1 loads A
- Manager sends Core 0 writeback request
- Core 0 downgrades
- Core 1 receives new lease based on its pts

```
Core 0:          Core 1:
  store A
  load  B
                   store B
                   load  A
  load  B
```

Core 0

pts: 1

A’	state: S	wts: 1	rts: 1
B	state: S	wts: 1	rts: 11

Core 1

pts: 12

A	state: I	wts:	rts:
B’	state: M	wts: 12	rts: 12

Manager

A’	state: S	owner:	wts: 12	rts: 22
B	state: M	owner: 1	wts: 12	rts: 12

Example

- Core 1 loads A
- Manager sends Core 0 writeback request
- Core 0 downgrades
- Core 1 receives new lease based on its pts
  - [wts, rts] = [12, 22]

```
Core 0:          Core 1:
  store A
  load  B
                   store B
                   load  A
  load  B
```

Core 0

pts: 1

A’	state: S	wts: 1	rts: 1
B	state: S	wts: 1	rts: 11

Core 1

pts: 12

A’	state: S	wts: 12	rts: 22
B’	state: M	wts: 12	rts: 12

Manager

A’	state: S	owner:	wts: 12	rts: 22
B	state: M	owner: 1	wts: 12	rts: 12

Example

- Core 1 loads A
- Manager sends Core 0 writeback request
- Core 0 downgrades
- Core 1 receives new lease based on its pts
  - [wts, rts] = [12, 22]
- Core 1 reads A’ at pts 12

Example

```
Core 0:          Core 1:
  store A
  load  B
                   store B
                   load  A
  load  B
```

Core 0 — pts: 1

A’	state: S	wts: 1	rts: 1
B	state: S	wts: 1	rts: 11

Core 1 — pts: 12

A’	state: S	wts: 12	rts: 22
B’	state: M	wts: 12	rts: 12

Manager

A’	state: S	owner:	wts: 12	rts: 22
B	state: M	owner: 1	wts: 12	rts: 12

```
Core 0:          Core 1:
  store A
  load  B
                   store B
                   load  A
  load  B
```

Core 0

pts: 1

A’	state: S	wts: 1	rts: 1
B	state: S	wts: 1	rts: 11

Core 1

pts: 12

A’	state: S	wts: 12	rts: 22
B’	state: M	wts: 12	rts: 12

Manager

A’	state: S	owner:	wts: 12	rts: 22
B	state: M	owner: 1	wts: 12	rts: 12

Example

- Core 0 loads B

```
Core 0:          Core 1:
  store A
  load  B
                   store B
                   load  A
  load  B
```

Core 0

pts: 1

A’	state: S	wts: 1	rts: 1
B	state: S	wts: 1	rts: 11

Core 1

pts: 12

A’	state: S	wts: 12	rts: 22
B’	state: M	wts: 12	rts: 12

Manager

A’	state: S	owner:	wts: 12	rts: 22
B	state: M	owner: 1	wts: 12	rts: 12

Example

- Core 0 loads B
- Cache hit; simply loads B from data cache

```
Core 0:          Core 1:
  store A
  load  B
                   store B
                   load  A
  load  B
```

Core 0

pts: 1

A’	state: S	wts: 1	rts: 1
B	state: S	wts: 1	rts: 11

Core 1

pts: 12

A’	state: S	wts: 12	rts: 22
B’	state: M	wts: 12	rts: 12

Manager

A’	state: S	owner:	wts: 12	rts: 22
B	state: M	owner: 1	wts: 12	rts: 12

Example

- Core 0 loads B
- Cache hit; simply loads B from data cache
- Sequential order (→) ≠ physical order (→)

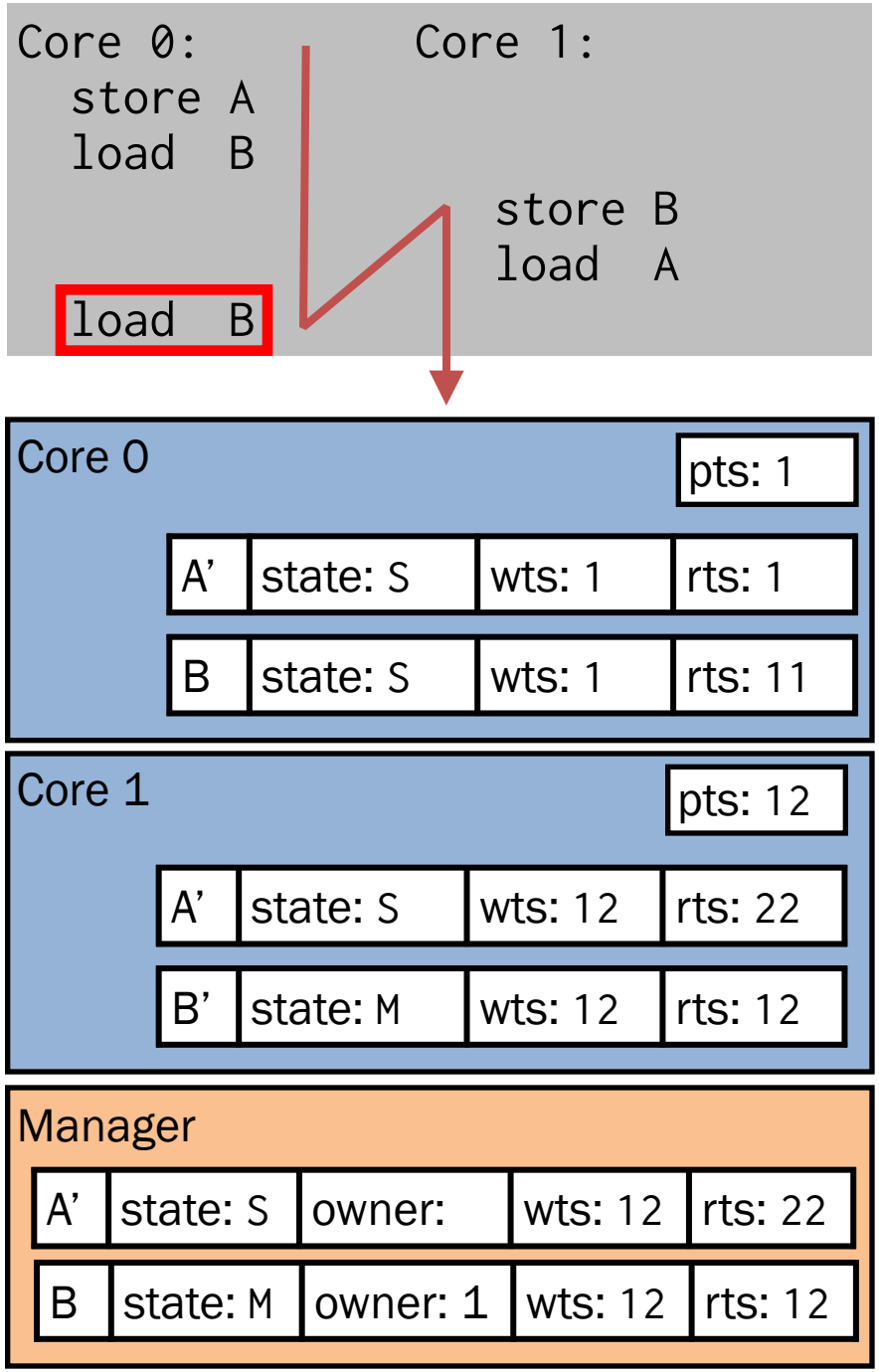

Example

- Core 0 loads B
- Cache hit; simply loads B from data cache
- Sequential order (→) ≠ physical order (→)

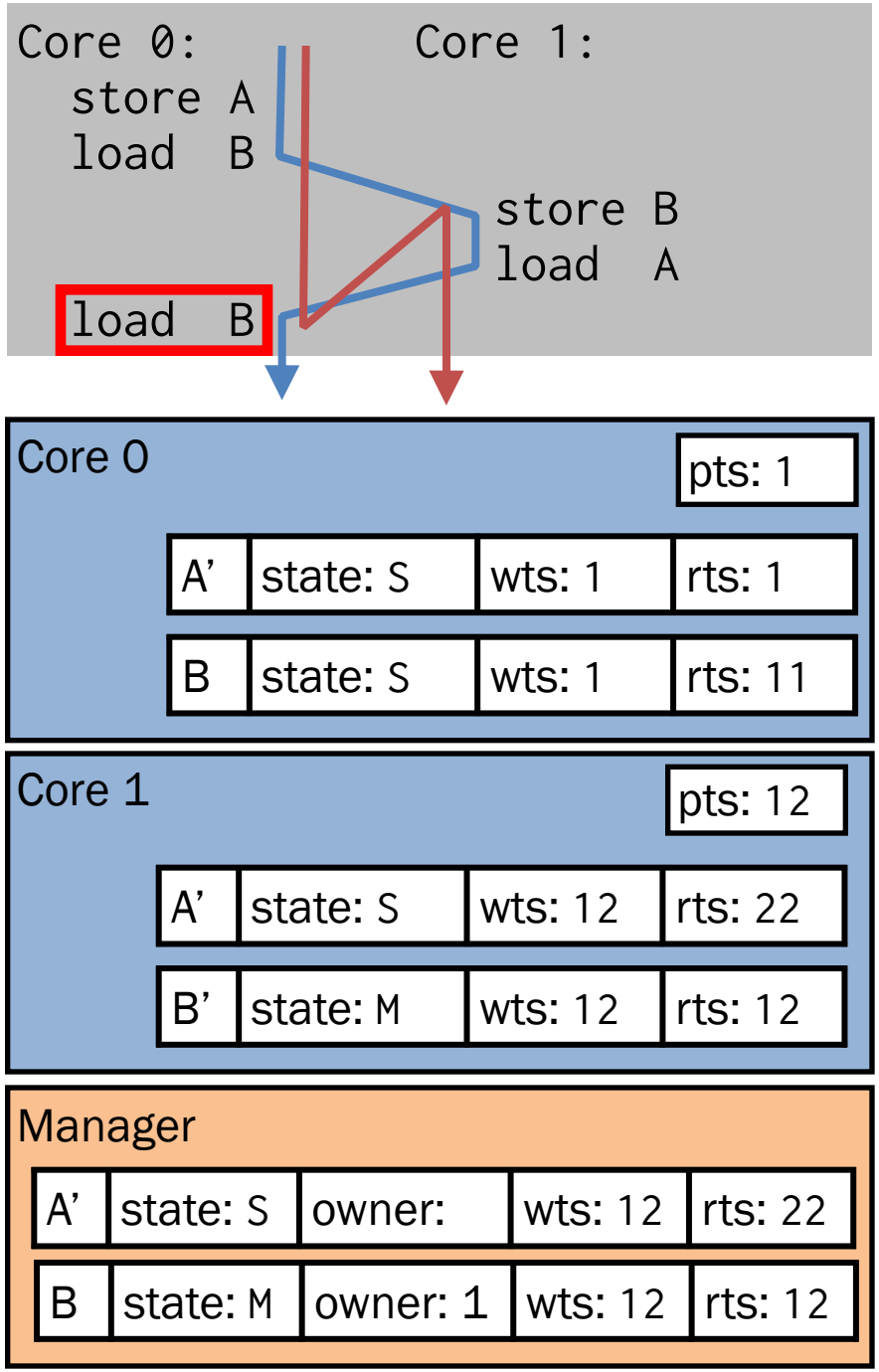

Example

- Core 0 loads B
- Cache hit; simply loads B from data cache
- Sequential order (→) ≠ physical order (→)

A case for scalability

A case for scalability

- Track only one node: O(log N) storage

A case for scalability

- Track only one node: O(log N) storage
- No broadcast invalidations

A case for scalability

- Track only one node: O(log N) storage
- No broadcast invalidations
- Timestamps not tied to core count

A case for scalability

- Track only one node: O(log N) storage
- No broadcast invalidations
- Timestamps not tied to core count
  - Can be compressed

A case for scalability

- Track only one node: O(log N) storage
- No broadcast invalidations
- Timestamps not tied to core count
  - Can be compressed
  - No need for synchronized real-time clocks

Outline

- The Tardis cache coherence protocol
- **Thousand-core prototype**
- RISC-V and Tardis

Thousand-core shared memory systems

Thousand-core shared memory systems

- Fit as many cores will fit on a ZC706

Thousand-core shared memory systems

- Fit as many cores will fit on a ZC706
- Connect in a 3D mesh

Thousand-core shared memory systems

- Fit as many cores will fit on a ZC706
- Connect in a 3D mesh
  - Aurora links, six connectors per board

Thousand-core shared memory systems

- Fit as many cores will fit on a ZC706
- Connect in a 3D mesh
  - Aurora links, six connectors per board
- Demonstrate shared memory at scale

Thousand-core shared memory systems

- Fit as many cores will fit on a ZC706
- Connect in a 3D mesh
  - Aurora links, six connectors per board
- Demonstrate shared memory at scale
- Name:

Thousand-core shared memory systems

- Fit as many cores will fit on a ZC706
- Connect in a 3D mesh
  - Aurora links, six connectors per board
- Demonstrate shared memory at scale
- Name: T-1000

Thousand-core shared memory systems

- Fit as many cores will fit on a ZC706
- Connect in a 3D mesh
  - Aurora links, six connectors per board
- Demonstrate shared memory at scale
- Name: T-1000

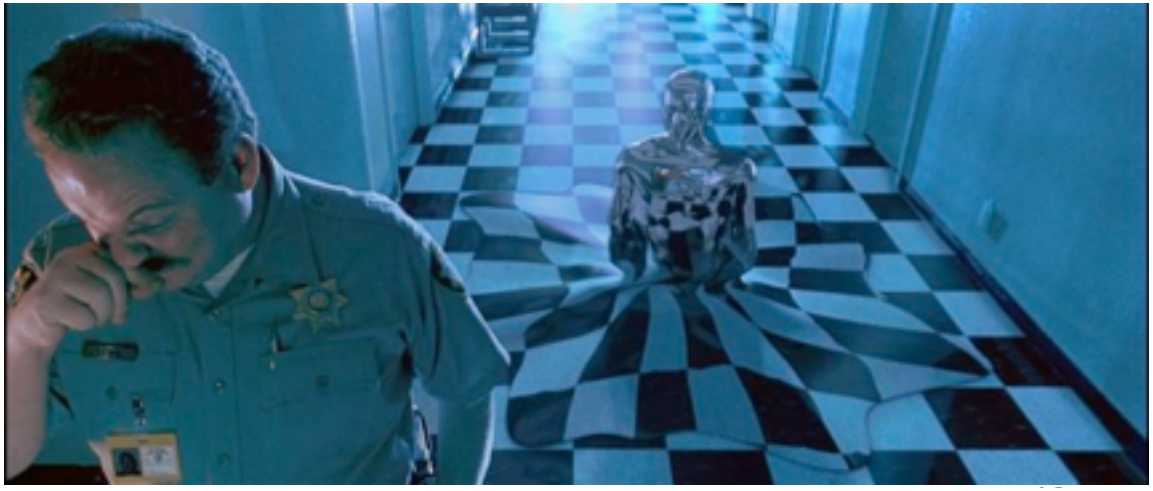

Terminator 2: Judgment Day (1991)
Carolco Pictures, Lightstorm Entertainment, Le Studio Canal+, and TriStar Pictures

CSAIL

Outline

- The Tardis cache coherence protocol
- Thousand-core prototype
- **RISC-V and Tardis**

Tardis and RISC-V

Tardis and RISC-V

- RISC-V: clean, extensible, orthogonal, free

Tardis and RISC-V

- RISC-V: clean, extensible, orthogonal, free
- Chisel simplifies extending hardware

Tardis and RISC-V

- RISC-V: clean, extensible, orthogonal, free
- Chisel simplifies extending hardware
- Things to consider:
  - Release consistency
  - Atomic instructions
  - Synchronization (see S.M.)

Quan Nguyen, "Synchronization in Timestamp-Based Cache Coherence Protocols", S.M. thesis, MIT, 2016.

Consistency model comparison

Type	Ordering rule	Tardis rule

$<_p$: program order $<_s$: global memory order $<_{ts}$: timestamp order

Consistency model comparison

Type	Ordering rule	Tardis rule
SC	$X <_p Y \Longrightarrow X <_s Y$	$X <_p Y \Longrightarrow X <_{ts} Y$

$<_p$: program order $<_s$: global memory order $<_{ts}$: timestamp order

Consistency model comparison

Type	Ordering rule	Tardis rule
SC	$X <_p Y \Longrightarrow X <_s Y$	$X <_p Y \Longrightarrow X <_{ts} Y$

$<_p$: program order $<_s$: global memory order $<_{ts}$: timestamp order

Consistency model comparison

Type	Ordering rule	Tardis rule
SC	$X <_p Y \Longrightarrow X <_s Y$	$X <_p Y \Longrightarrow X <_{ts} Y$
RC: ordinary memory ops	respect dependencies	respect dependencies

$<_p$: program order $<_s$: global memory order $<_{ts}$: timestamp order

Consistency model comparison

Type	Ordering rule	Tardis rule
SC	$X <_p Y \Longrightarrow X <_s Y$	$X <_p Y \Longrightarrow X <_{ts} Y$
RC: ordinary memory ops	respect dependencies	respect dependencies
RC: acquires	$acq <_p X \Longrightarrow acq <_s X$	$acq <_p X \Longrightarrow acq <_{ts} X$

$<_p$: program order $<_s$: global memory order $<_{ts}$: timestamp order

Consistency model comparison

Type	Ordering rule	Tardis rule
SC	$X <_p Y \Longrightarrow X <_s Y$	$X <_p Y \Longrightarrow X <_{ts} Y$
RC: ordinary memory ops	respect dependencies	respect dependencies
RC: acquires	$acq <_p X \Longrightarrow acq <_s X$	$acq <_p X \Longrightarrow acq <_{ts} X$
RC: releases	$X <_p rel \Longrightarrow X <_s rel$	$X <_p rel \Longrightarrow X <_{ts} rel$

$<_p$: program order $<_s$: global memory order $<_{ts}$: timestamp order

Consistency model comparison

Type	Ordering rule	Tardis rule
SC	$X <_p Y \Longrightarrow X <_s Y$	$X <_p Y \Longrightarrow X <_{ts} Y$
RC: ordinary memory ops	respect dependencies	respect dependencies
RC: acquires	$acq <_p X \Longrightarrow acq <_s X$	$acq <_p X \Longrightarrow acq <_{ts} X$
RC: releases	$X <_p rel \Longrightarrow X <_s rel$	$X <_p rel \Longrightarrow X <_{ts} rel$
RC: sync $S \in \{acq, rel\}$	$S_X <_p S_Y \Longrightarrow S_X <_s S_Y$	$S_X <_p S_Y \Longrightarrow S_X <_{ts} S_Y$

$<_p$: program order $<_s$: global memory order $<_{ts}$: timestamp order

Release consistency and Tardis

Release consistency and Tardis

- **ts_{min}**: minimum timestamp for future ops

Release consistency and Tardis

- **ts_{min}**: minimum timestamp for future ops
- **ts_{max}**: maximal timestamp of preceding ops (in timestamp order)

Release consistency and Tardis

- **ts_{min}**: minimum timestamp for future ops
- **ts_{max}**: maximal timestamp of preceding ops (in timestamp order)
- Fences: $ts_{min} \leftarrow ts_{max}$

Release consistency and Tardis

- $\mathbf{ts_{min}}$: minimum timestamp for future ops
- $\mathbf{ts_{max}}$: maximal timestamp of preceding ops (in timestamp order)
- Fences: $ts_{min} \leftarrow ts_{max}$
- Track acquires/releases with $\mathbf{ts_{rel}}$

Release consistency and Tardis

- **ts_{min}**: minimum timestamp for future ops
- **ts_{max}**: maximal timestamp of preceding ops (in timestamp order)
- Fences: $ts_{min} \leftarrow ts_{max}$
- Track acquires/releases with **ts_{rel}**
  - Release: $ts_{rel} \leftarrow ts_{max}$

Release consistency and Tardis

- **ts_{min}**: minimum timestamp for future ops
- **ts_{max}**: maximal timestamp of preceding ops (in timestamp order)
- Fences: $ts_{min} \leftarrow ts_{max}$
- Track acquires/releases with **ts_{rel}**
  - Release: $ts_{rel} \leftarrow ts_{max}$
  - Acquire: $ts_{min} \leftarrow ts_{rel}$

Load-reserved and store-conditional

Load-reserved and store-conditional

- Tardis gives neat solution to LR/SC livelock

Load-reserved and store-conditional

- Tardis gives neat solution to LR/SC livelock
- wts tracks cache line version

Load-reserved and store-conditional

- Tardis gives neat solution to LR/SC livelock
- wts tracks cache line version
- SC success condition: $wts_{lr} == wts_{before\ sc}$

LR/SC example

```
loop:
  lr.d      x1, 0(C)
  <do stuff to x1>
  sc.d  x2, x1, 0(C)
  bnez  x2, loop
```

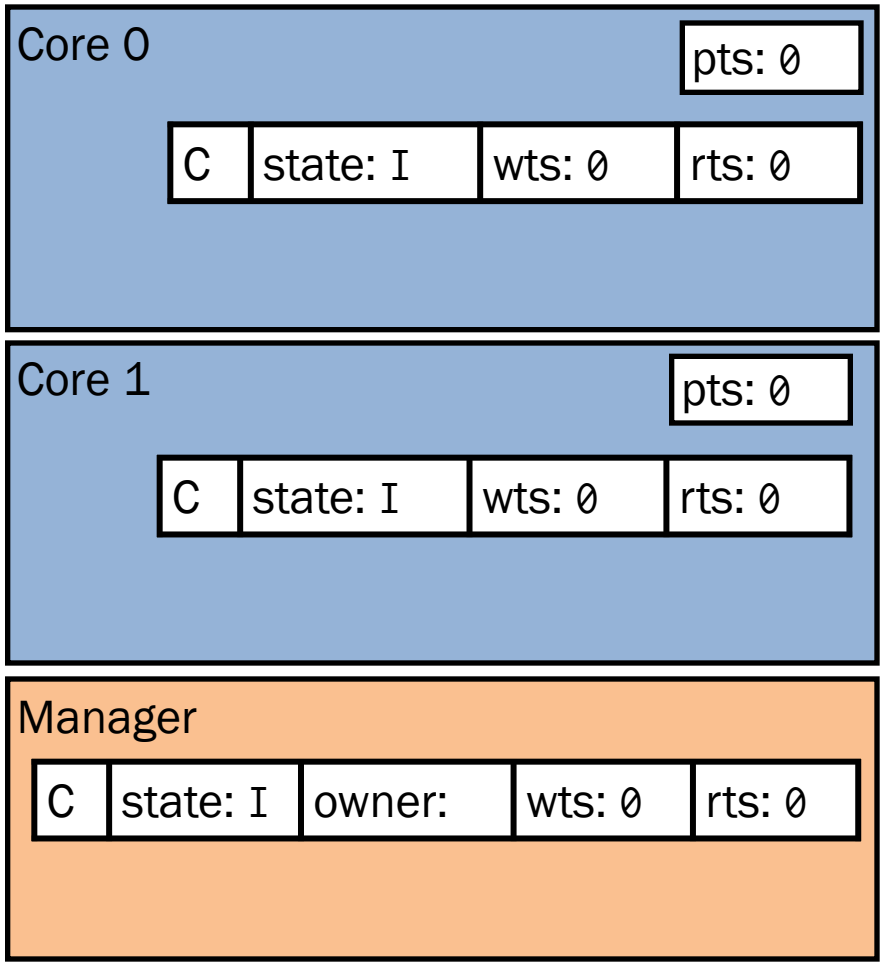

LR/SC example

```
loop:
  lr.d      x1, 0(C)
  <do stuff to x1>
  sc.d  x2, x1, 0(C)
  bnez  x2, loop
```

- Core 0 performs lr on C

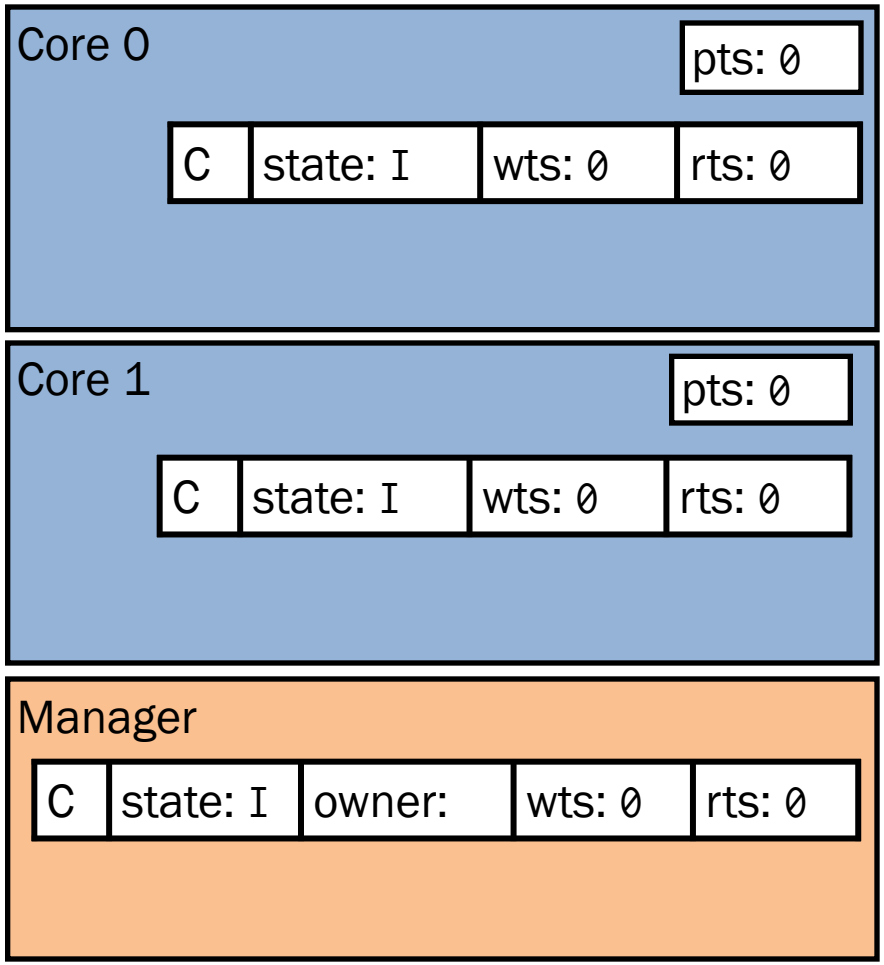

LR/SC example

```
loop:
  lr.d      x1, 0(C)
  <do stuff to x1>
  sc.d  x2, x1, 0(C)
  bnez  x2, loop
```

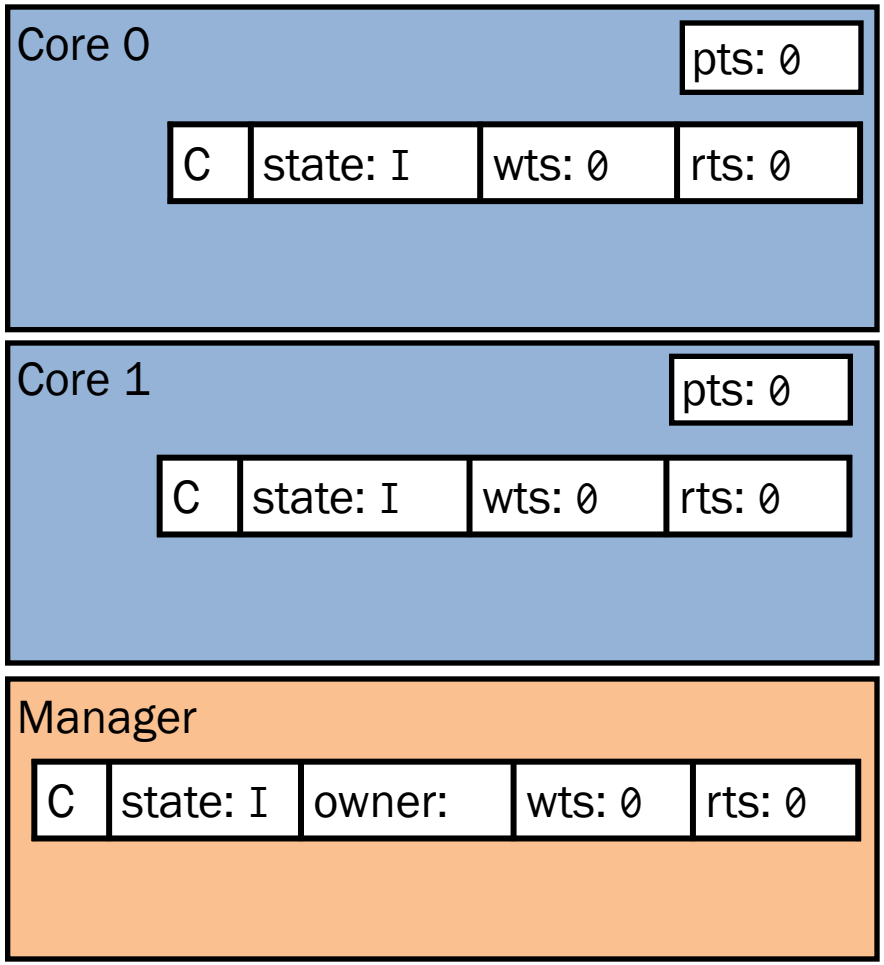

- Core 0 performs lr on C
  - exclusive ownership

LR/SC example

```
loop:
  lr.d      x1, 0(C)
  <do stuff to x1>
  sc.d  x2, x1, 0(C)
  bnez  x2, loop
```

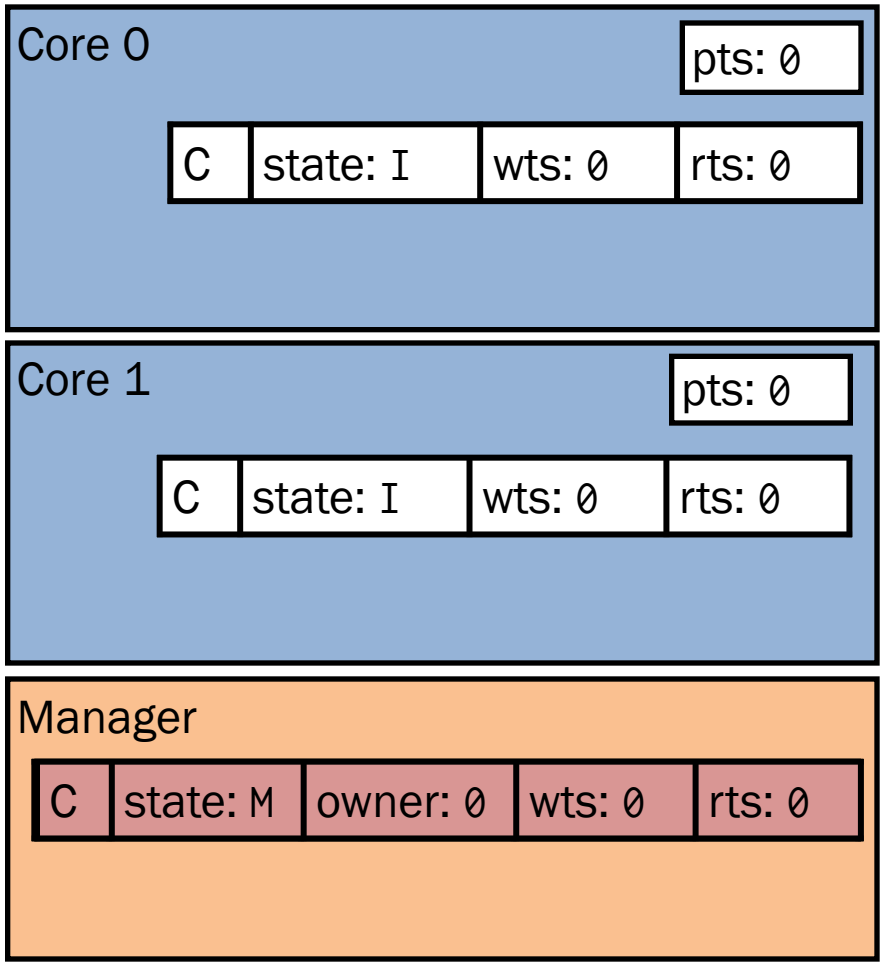

- Core 0 performs lr on C
  - exclusive ownership

LR/SC example

```
loop:
  lr.d      x1, 0(C)
  <do stuff to x1>
  sc.d  x2, x1, 0(C)
  bnez  x2, loop
```

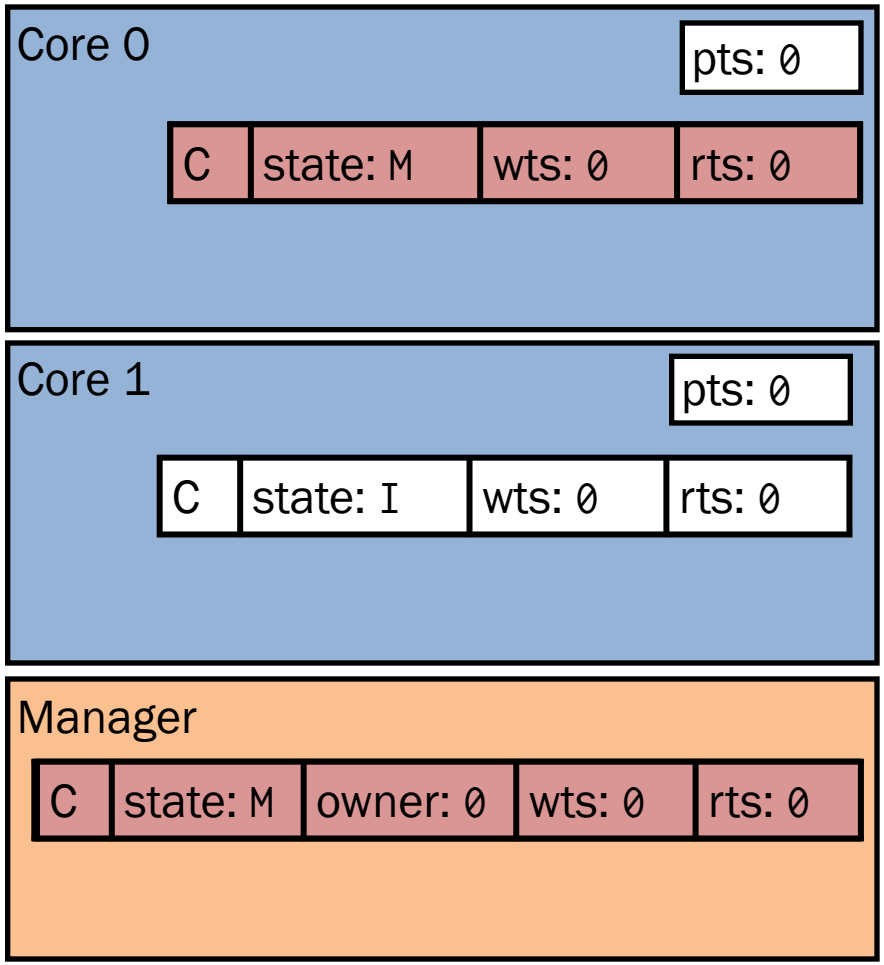

- Core 0 performs lr on C
  - exclusive ownership

```
loop:
  lr.d      x1, 0(C)
  <do stuff to x1>
  sc.d  x2, x1, 0(C)
  bnez  x2, loop
```

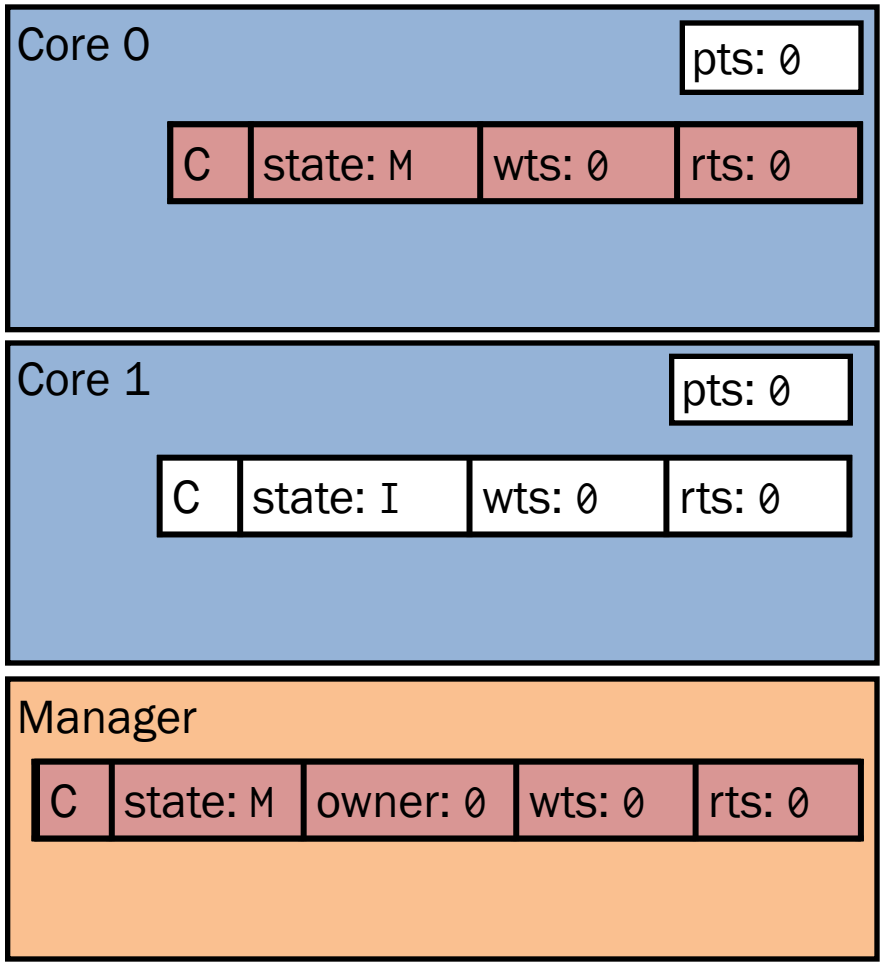

LR/SC example

- Core 0 performs lr on C
  - exclusive ownership
  - $wts_{lr} = 0$

```
loop:
  lr.d      x1, 0(C)
  <do stuff to x1>
  sc.d  x2, x1, 0(C)
  bnez  x2, loop
```

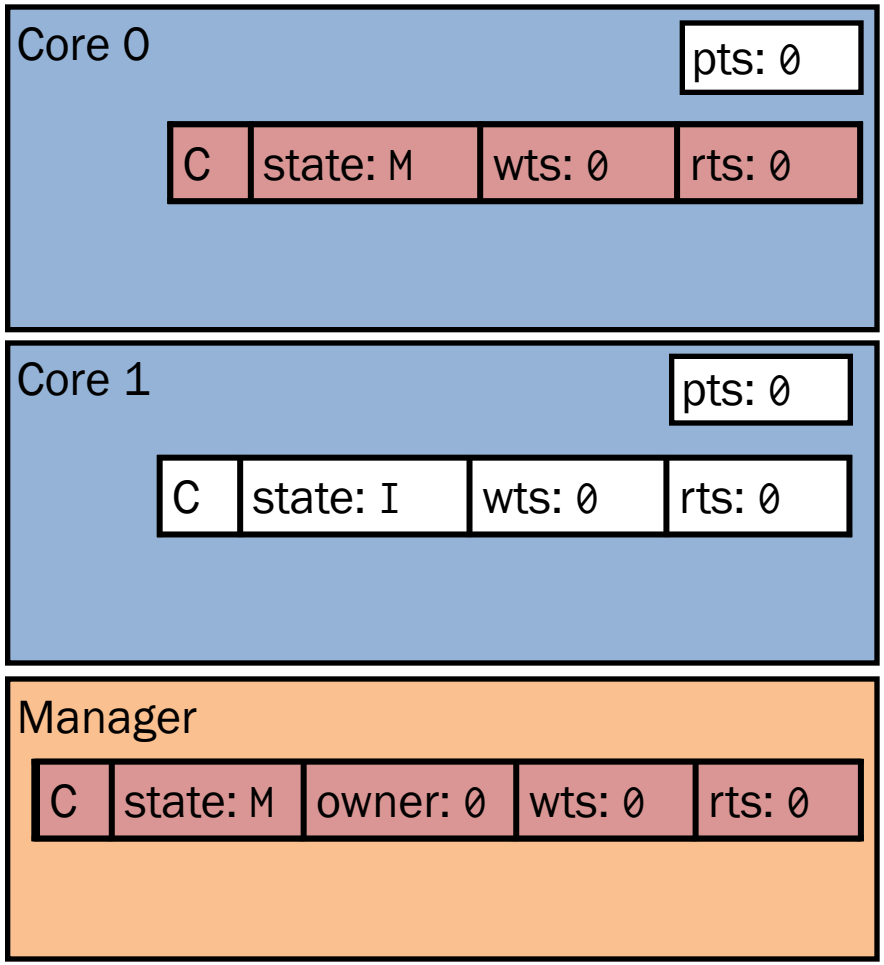

LR/SC example

- Core 0 performs lr on C
  - exclusive ownership
  - $wts_{lr} = 0$
- Core 1 performs lr on C

LR/SC example

```
loop:
  lr.d      x1, 0(C)
  <do stuff to x1>
  sc.d  x2, x1, 0(C)
  bnez  x2, loop
```

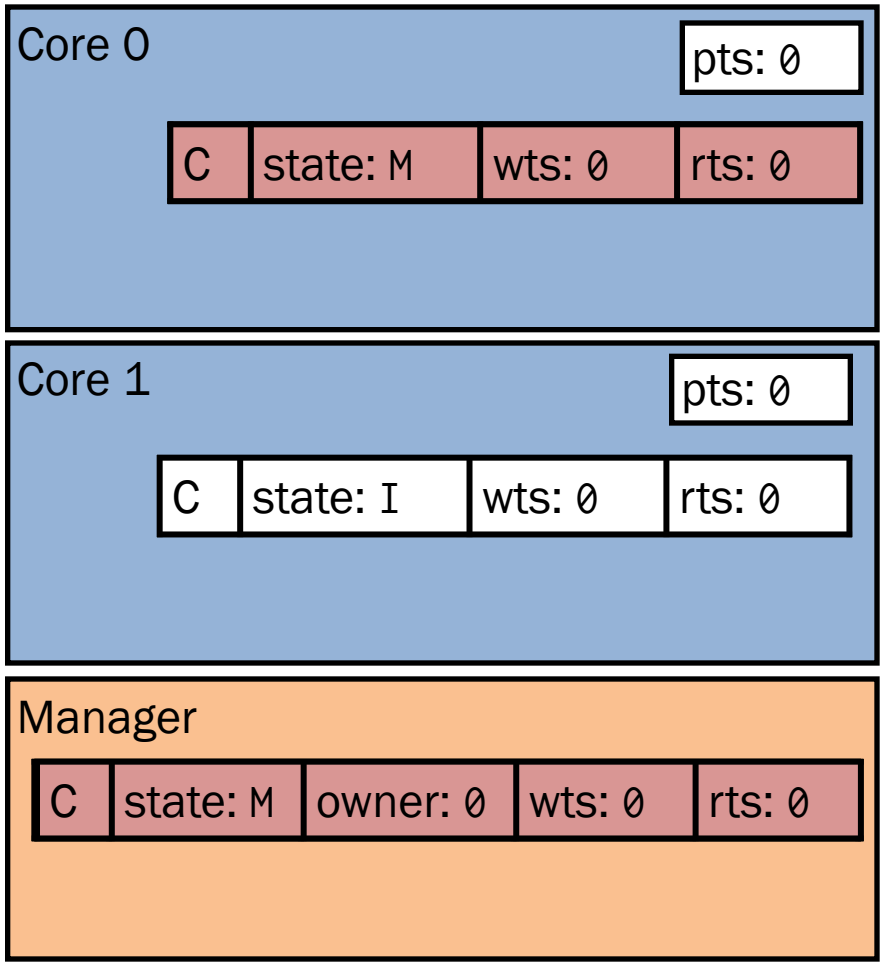

- Core 0 performs lr on C
  - exclusive ownership
  - $wts_{lr} = 0$
- Core 1 performs lr on C
  - core 0 downgraded

LR/SC example

```
loop:
  lr.d      x1, 0(C)
  <do stuff to x1>
  sc.d  x2, x1, 0(C)
  bnez  x2, loop
```

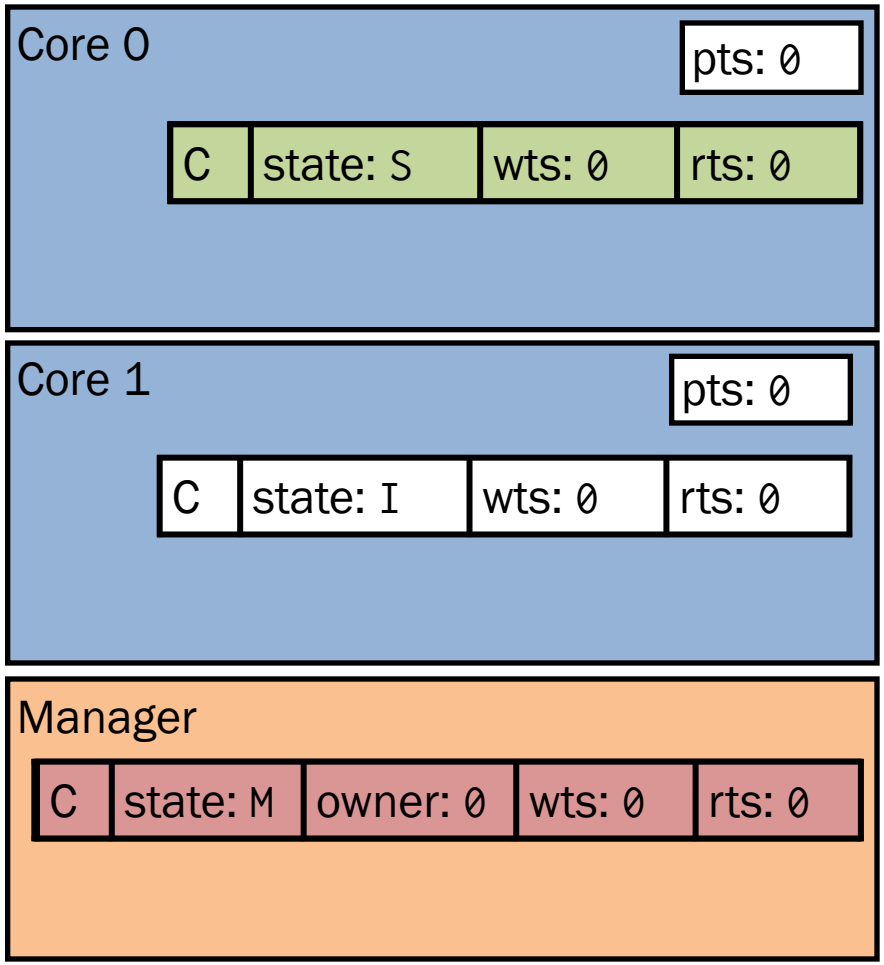

- Core 0 performs lr on C
  - exclusive ownership
  - $wts_{lr} = 0$
- Core 1 performs lr on C
  - core 0 downgraded

LR/SC example

```
loop:
  lr.d      x1, 0(C)
  <do stuff to x1>
  sc.d  x2, x1, 0(C)
  bnez  x2, loop
```

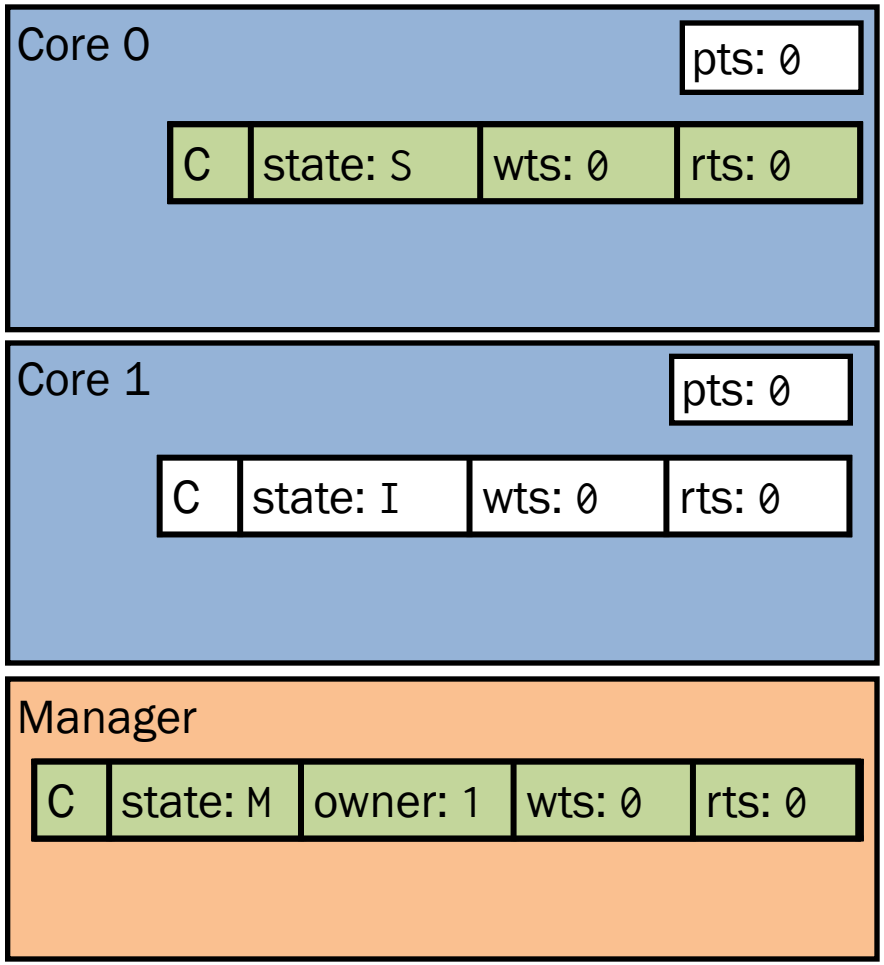

- Core 0 performs lr on C
  - exclusive ownership
  - $wts_{lr} = 0$
- Core 1 performs lr on C
  - core 0 downgraded

LR/SC example

```
loop:
  lr.d      x1, 0(C)
  <do stuff to x1>
  sc.d  x2, x1, 0(C)
  bnez  x2, loop
```

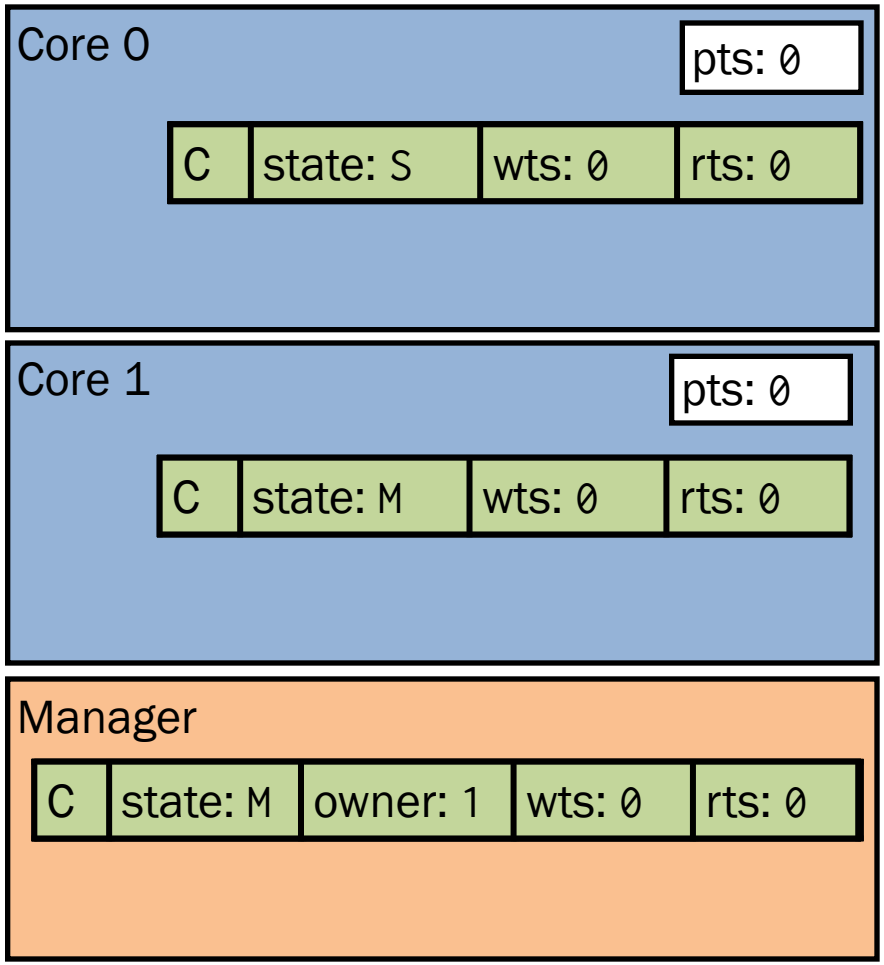

- Core 0 performs lr on C
  - exclusive ownership
  - $wts_{lr} = 0$
- Core 1 performs lr on C
  - core 0 downgraded

LR/SC example

```
loop:
  lr.d      x1, 0(C)
  <do stuff to x1>
  sc.d  x2, x1, 0(C)
  bnez  x2, loop
```

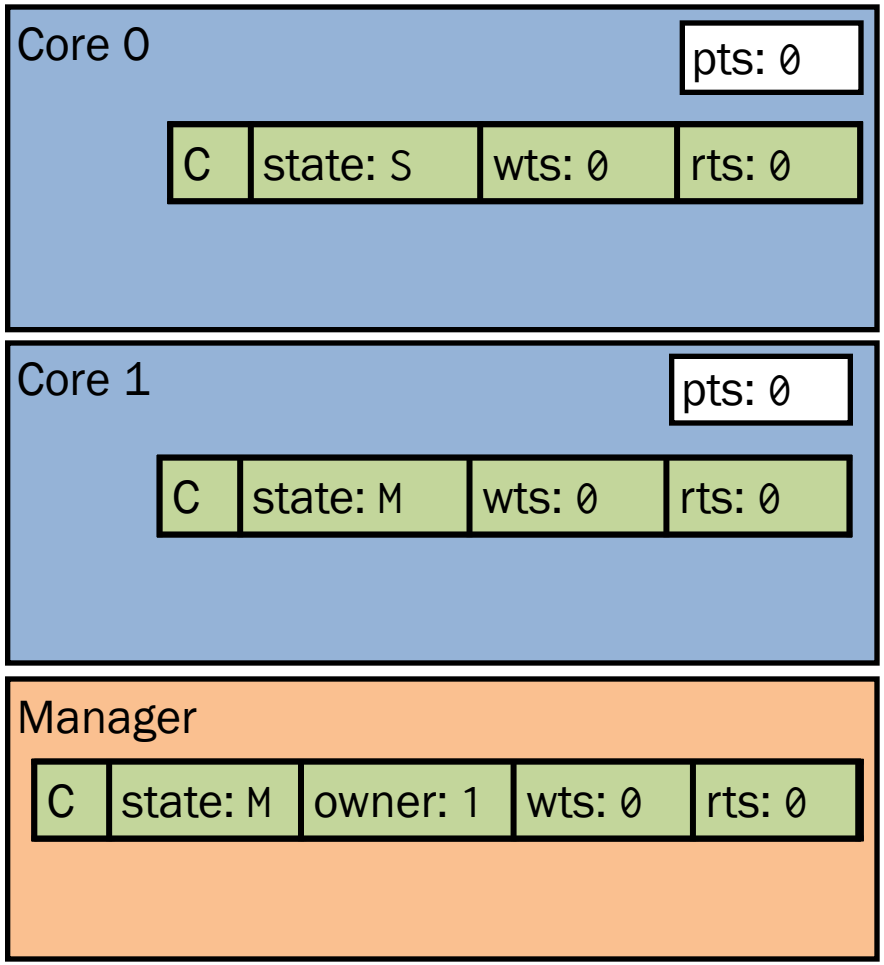

- Core 0 performs lr on C
  - exclusive ownership
  - $wts_{lr} = 0$
- Core 1 performs lr on C
  - core 0 downgraded
- Core 0 performs sc

LR/SC example

```
loop:
  lr.d      x1, 0(C)
  <do stuff to x1>
  sc.d  x2, x1, 0(C)
  bnez  x2, loop
```

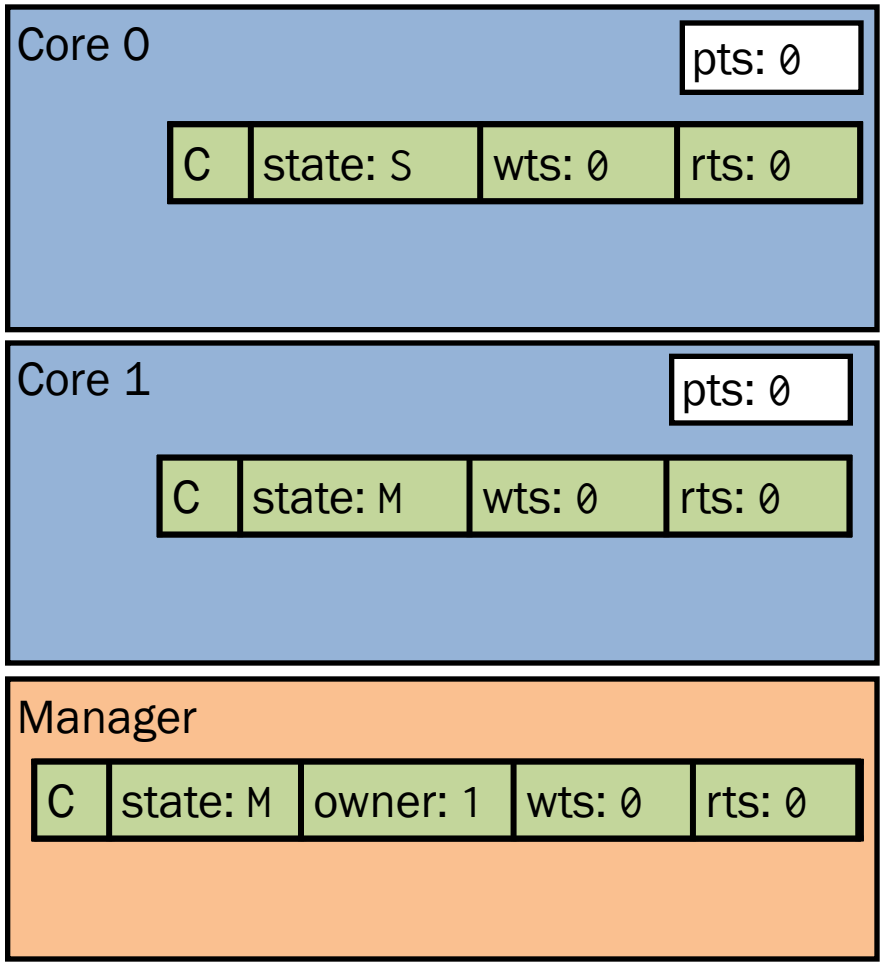

- Core 0 performs lr on C
  - exclusive ownership
  - $wts_{lr} = 0$
- Core 1 performs lr on C
  - core 0 downgraded
- Core 0 performs sc
  - core 1 downgraded

LR/SC example

```
loop:
  lr.d      x1, 0(C)
  <do stuff to x1>
  sc.d  x2, x1, 0(C)
  bnez  x2, loop
```

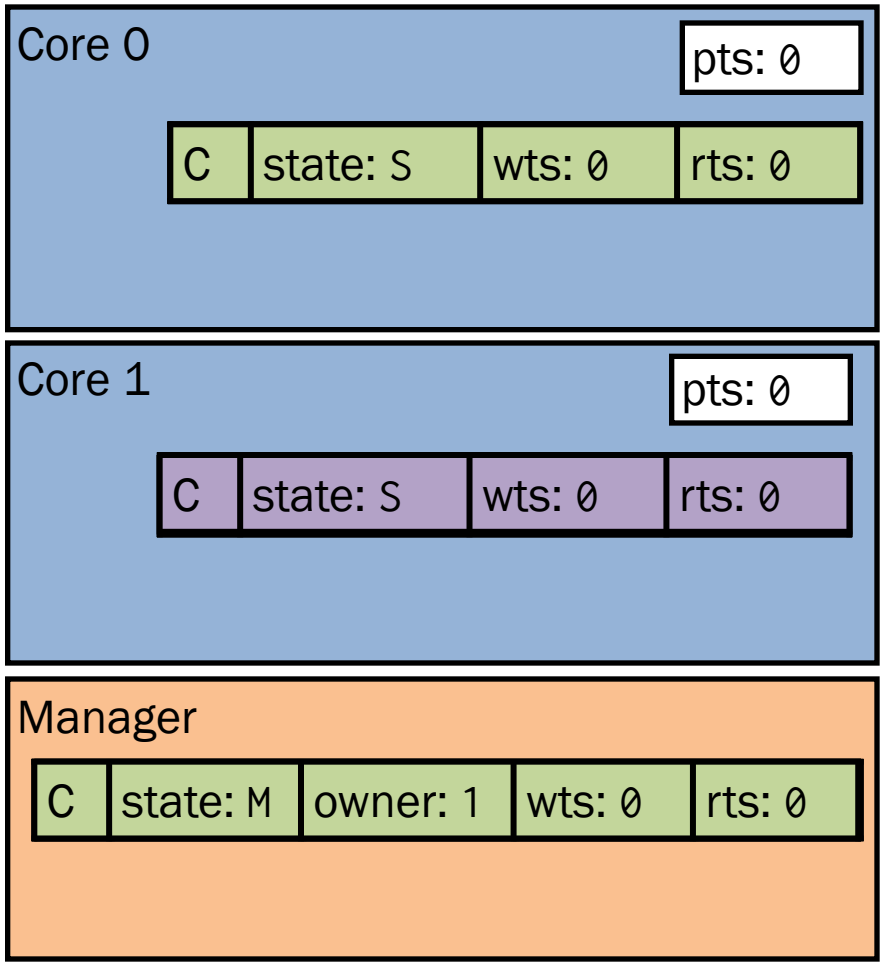

- Core 0 performs lr on C
  - exclusive ownership
  - $wts_{lr} = 0$
- Core 1 performs lr on C
  - core 0 downgraded
- Core 0 performs sc
  - core 1 downgraded

LR/SC example

```
loop:
  lr.d      x1, 0(C)
  <do stuff to x1>
  sc.d  x2, x1, 0(C)
  bnez  x2, loop
```

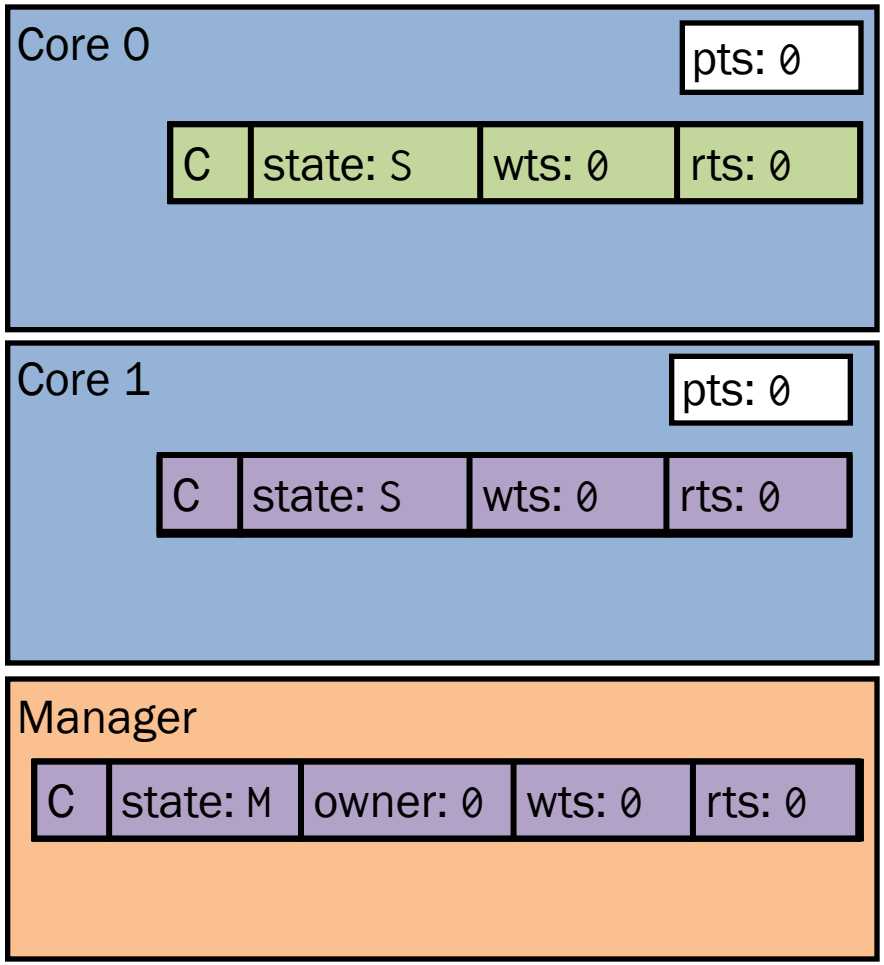

- Core 0 performs lr on C
  - exclusive ownership
  - $wts_{lr} = 0$
- Core 1 performs lr on C
  - core 0 downgraded
- Core 0 performs sc
  - core 1 downgraded

LR/SC example

```
loop:
  lr.d      x1, 0(C)
  <do stuff to x1>
  sc.d  x2, x1, 0(C)
  bnez  x2, loop
```

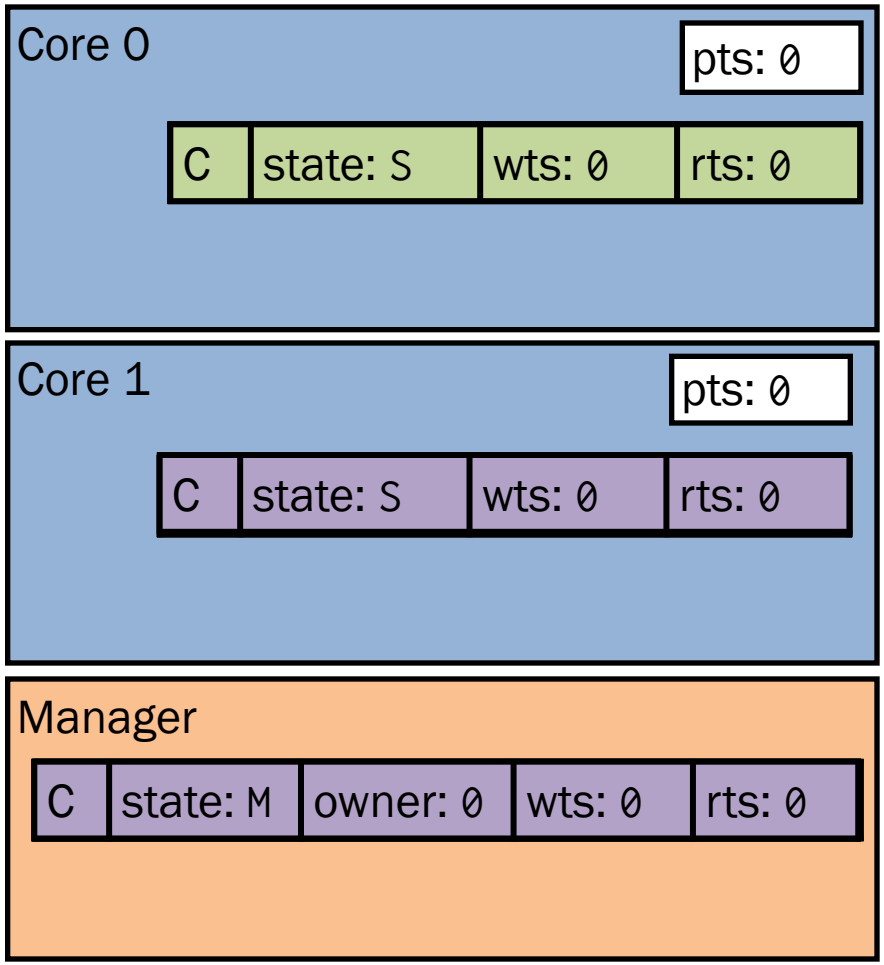

- Core 0 performs lr on C
  - exclusive ownership
  - $wts_{lr} = 0$
- Core 1 performs lr on C
  - core 0 downgraded
- Core 0 performs sc
  - core 1 downgraded
  - succeeds; $wts_{lr} == wts_C$

```
loop:
  lr.d      x1, 0(C)
  <do stuff to x1>
  sc.d  x2, x1, 0(C)
  bnez  x2, loop
```

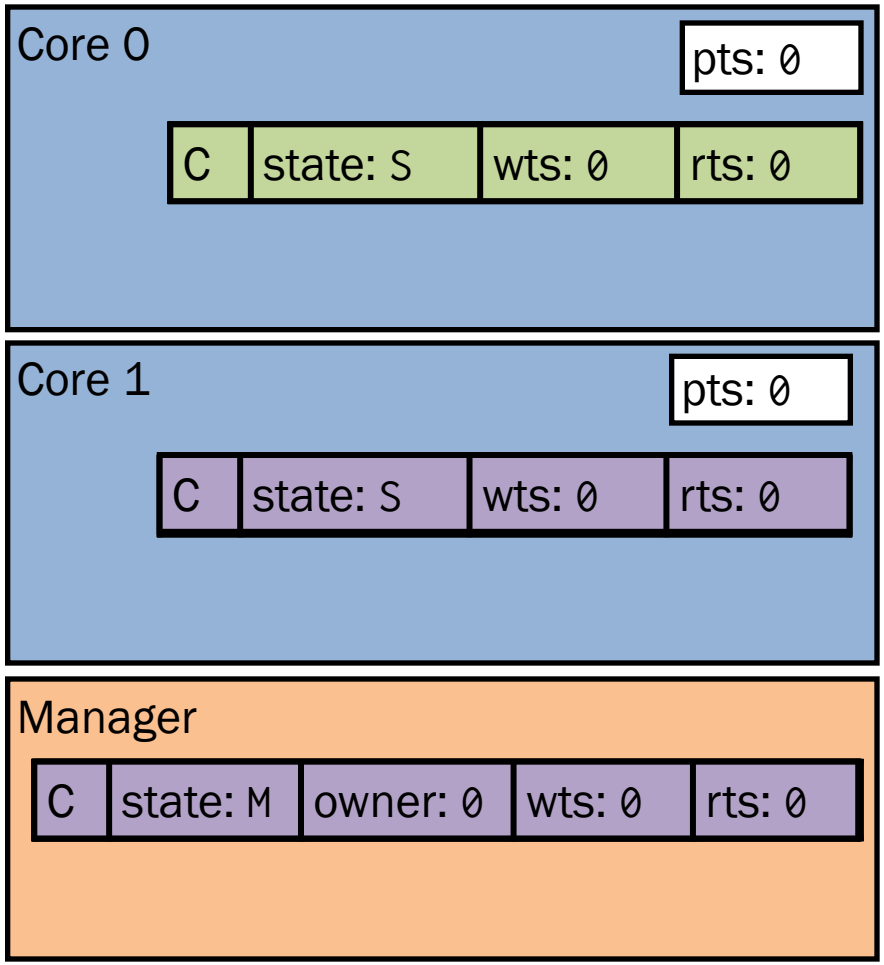

LR/SC example

- Core 0 performs lr on C
  - exclusive ownership
  - $wts_{lr} = 0$
- Core 1 performs lr on C
  - core 0 downgraded
- Core 0 performs sc
  - core 1 downgraded
  - succeeds; $wts_{lr} == wts_C$
  - writes C' at pts 1

```
loop:
  lr.d      x1, 0(C)
  <do stuff to x1>
  sc.d  x2, x1, 0(C)
  bnez  x2, loop
```

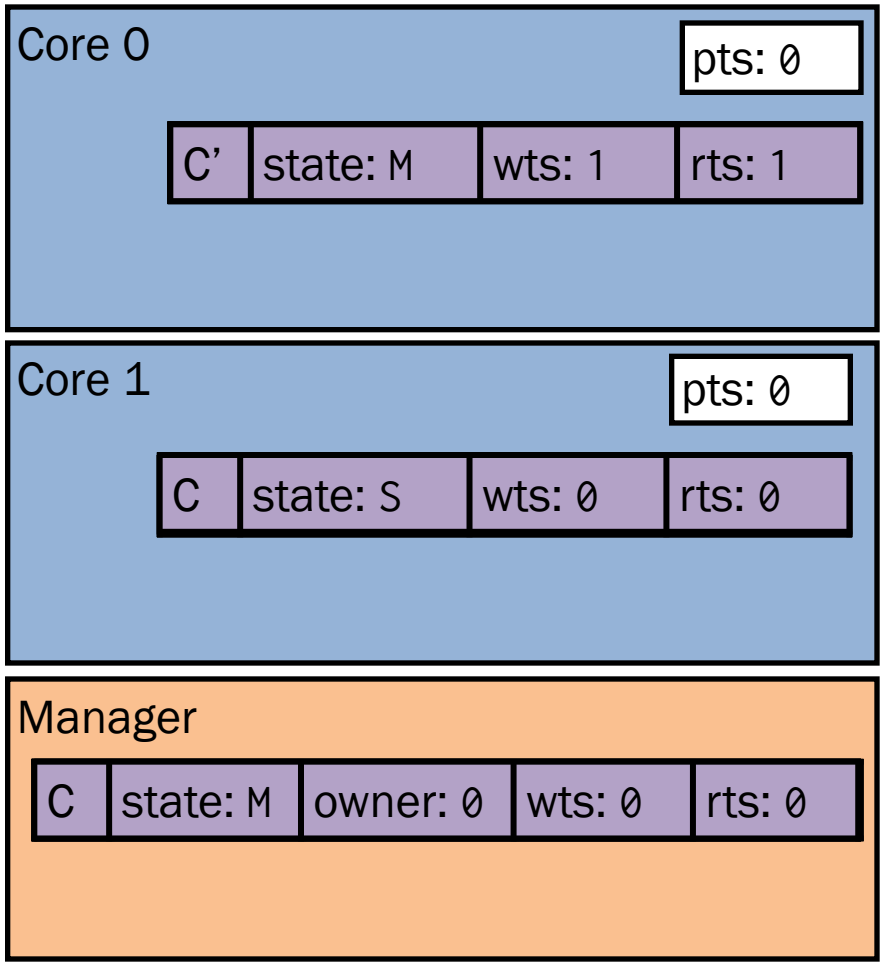

LR/SC example

- Core 0 performs lr on C
  - exclusive ownership
  - $wts_{lr} = 0$
- Core 1 performs lr on C
  - core 0 downgraded
- Core 0 performs sc
  - core 1 downgraded
  - succeeds; $wts_{lr} == wts_C$
  - writes C' at pts 1

```
loop:
  lr.d      x1, 0(C)
  <do stuff to x1>
  sc.d  x2, x1, 0(C)
  bnez  x2, loop
```

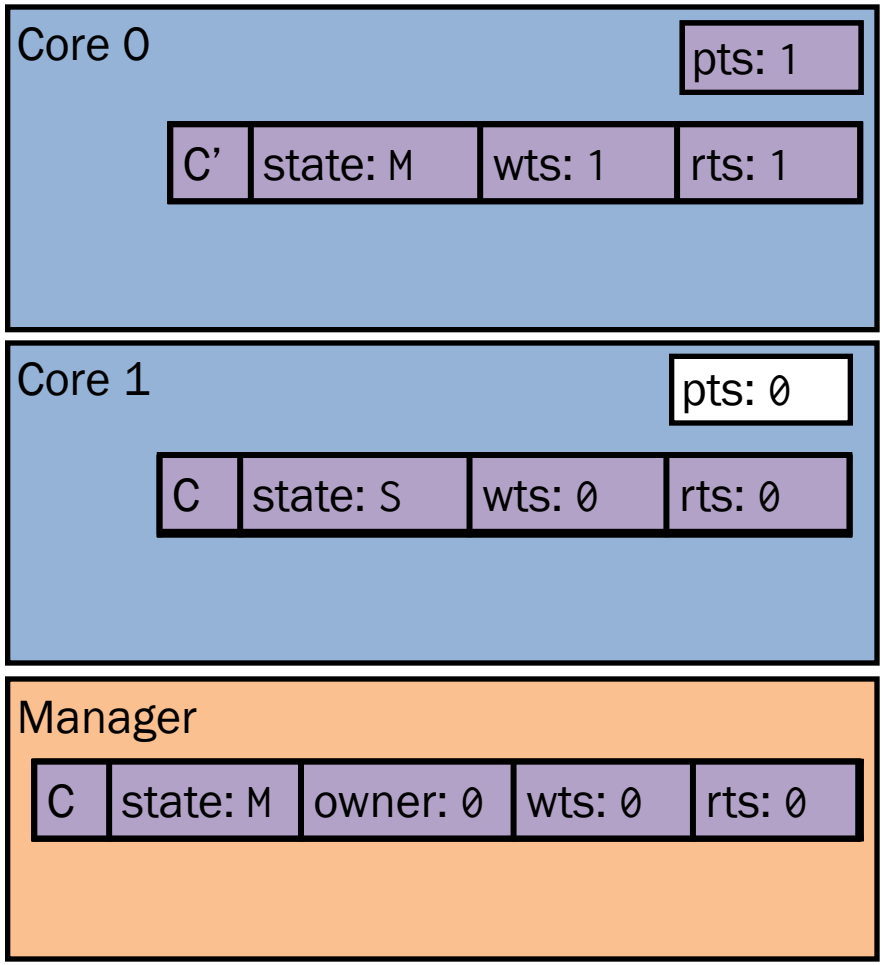

LR/SC example

- Core 0 performs lr on C
  - exclusive ownership
  - $wts_{lr} = 0$
- Core 1 performs lr on C
  - core 0 downgraded
- Core 0 performs sc
  - core 1 downgraded
  - succeeds; $wts_{lr} == wts_C$
  - writes C' at pts 1

Block diagram

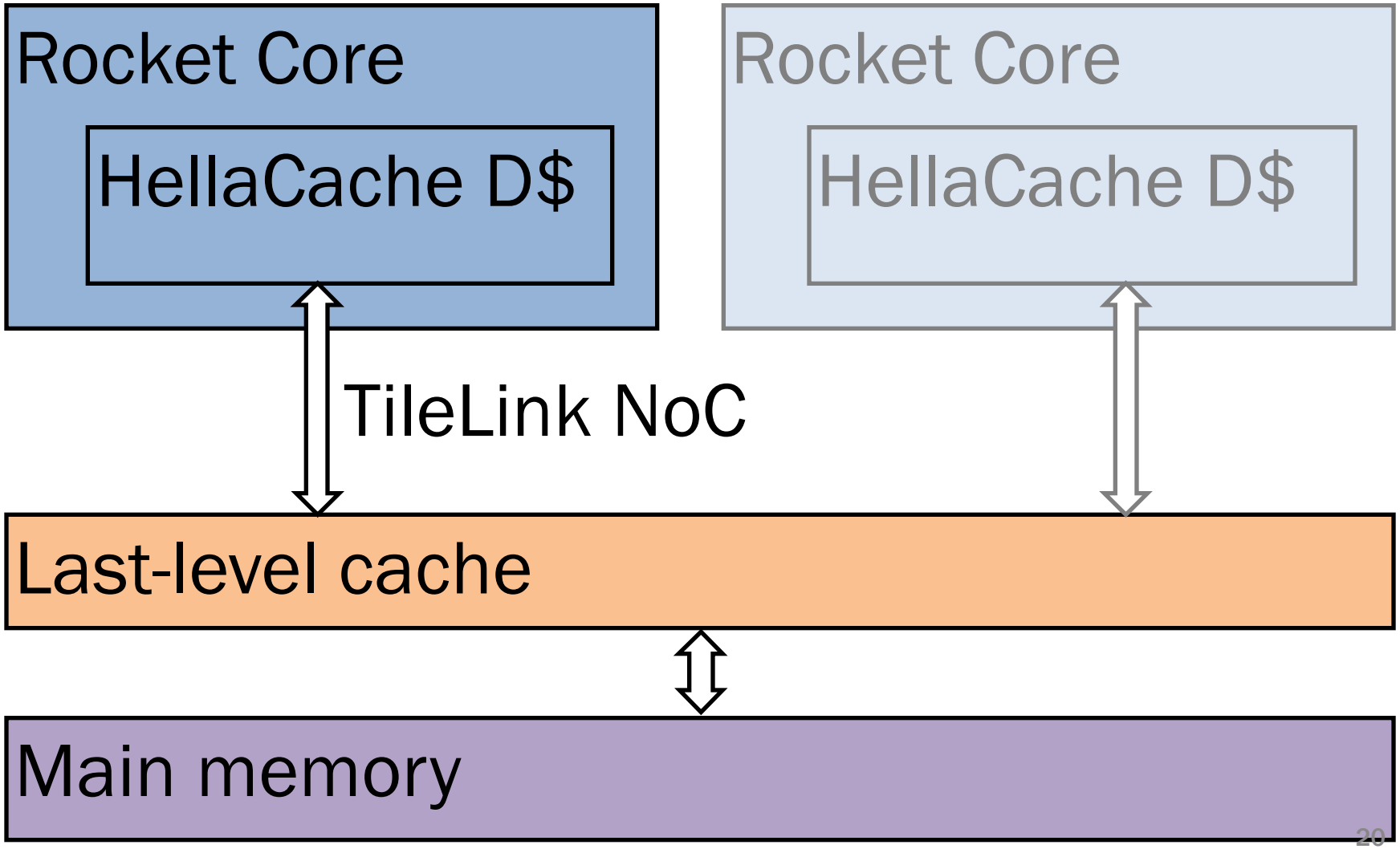

Block diagram

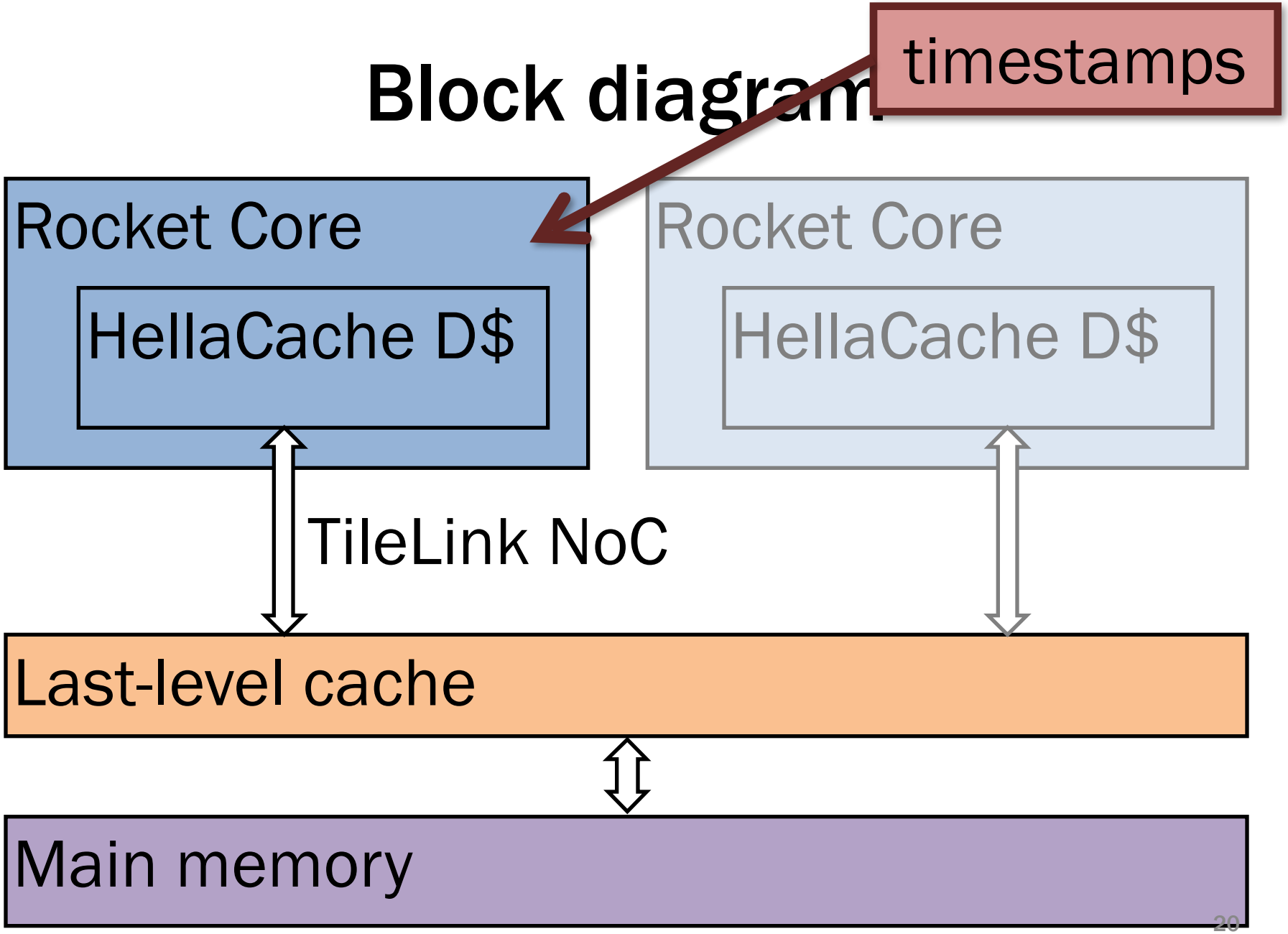

Block diagram

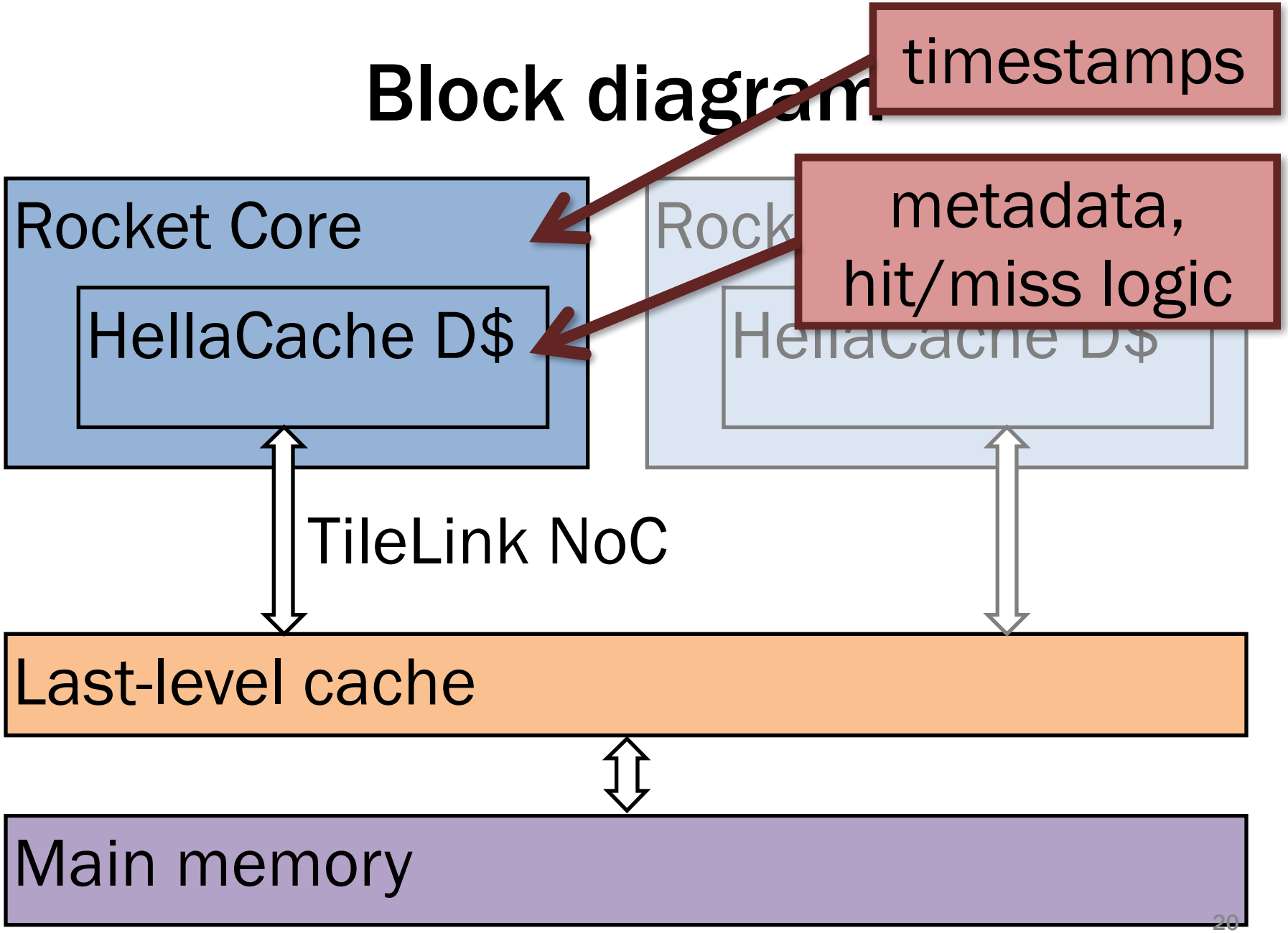

Block diagram

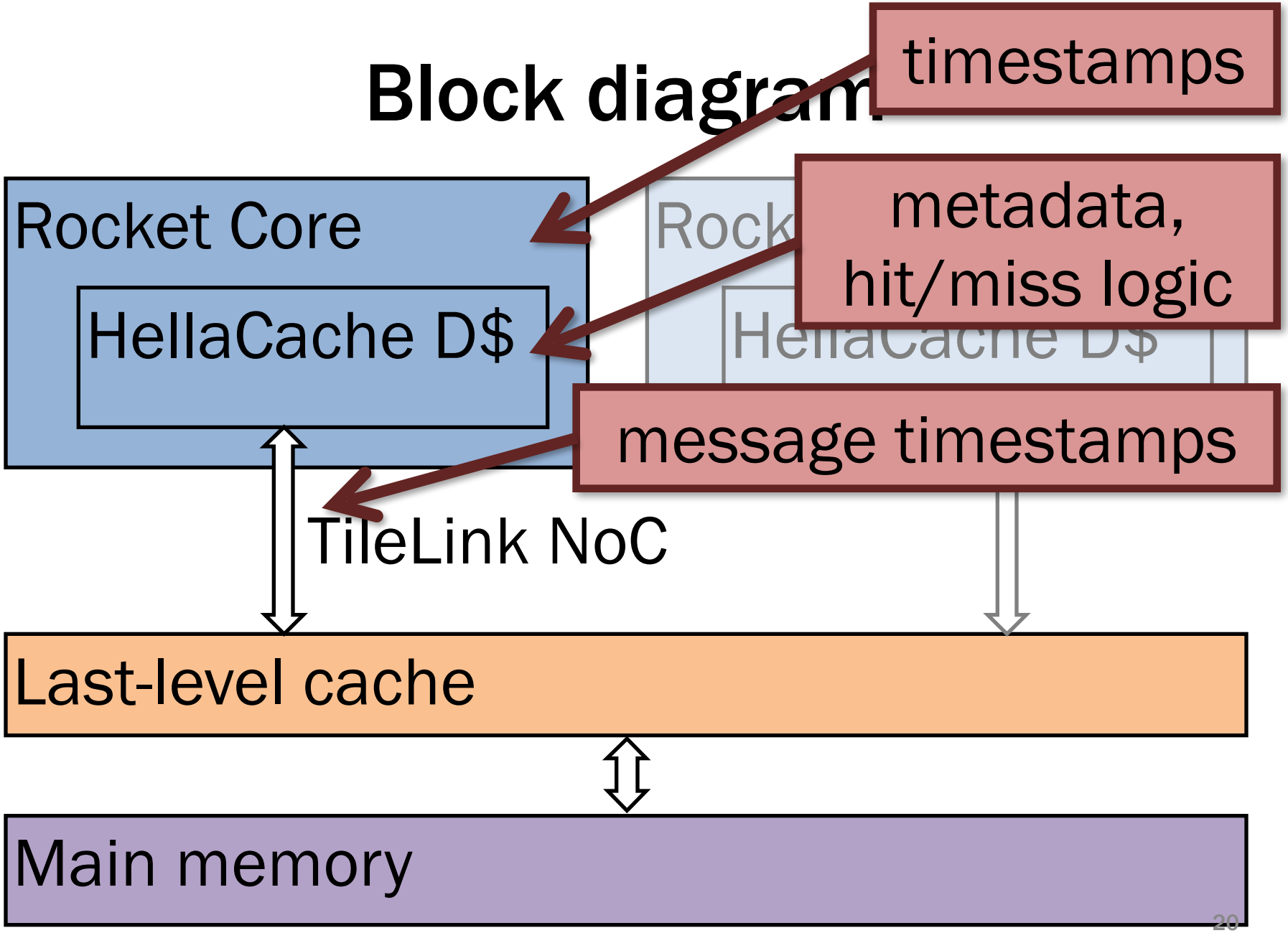

Block diagram

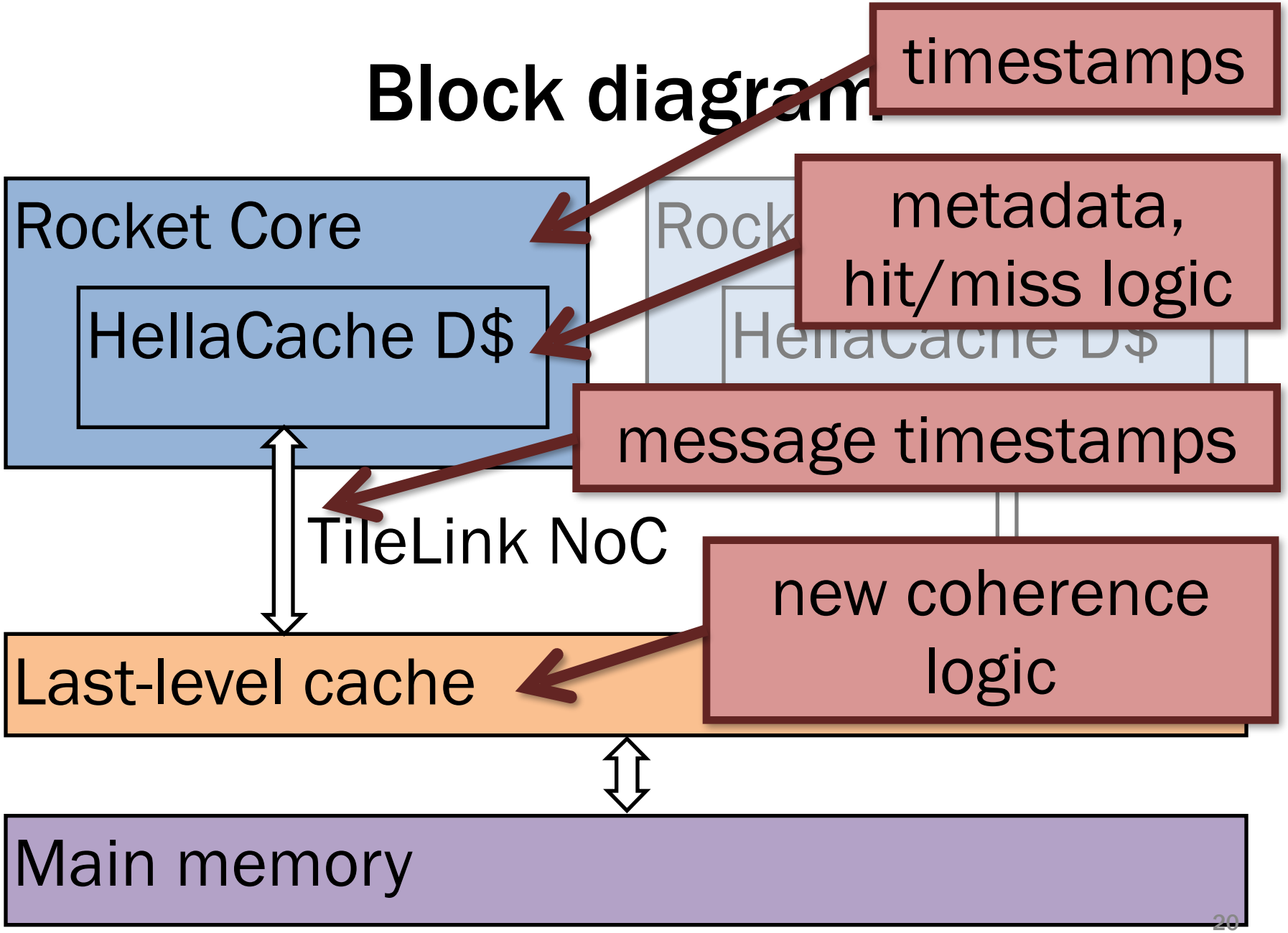

Thanks!

- Special thanks to Xiangyao Yu and Srini Devadas for their extensive advice and input