OpenHW Group 2020 BHAG

BIG HARRY AUDACIOUS GOAL

CORE-V™ Chassis

- production ready,
- CORE-V CV64A & CV32E cores,
- deep sub-micron SoC,
- on an eval board,
- running Linux / Zephyr
- Tapeout 2H, 2020

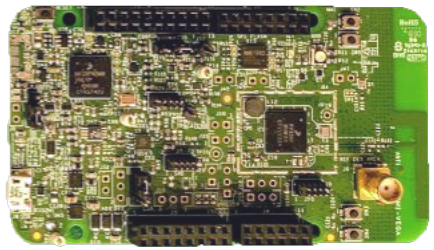

© OpenHW Group

CORE-V™ Chassis – tapeout 2H 2020

CORE-V Chassis based on NXP iMX Platform CORE-V™

- Linux capable 1.5GHz CV64A host CPU and CV32E coprocessor
- X32/x16 (LP)DDR4, DDR3L memory
- 3D / 2D GPUs with OpenGL support
- MIPI-DSI / CSI display / camera controllers
- Security: DRM Ciphers, key storage, random number generator, etc.
- GigE MAC
- PCIe 2.0 x1 port
- 2 USB 2.0 interfaces
- 3 SDIO interfaces for boot source, storage, etc

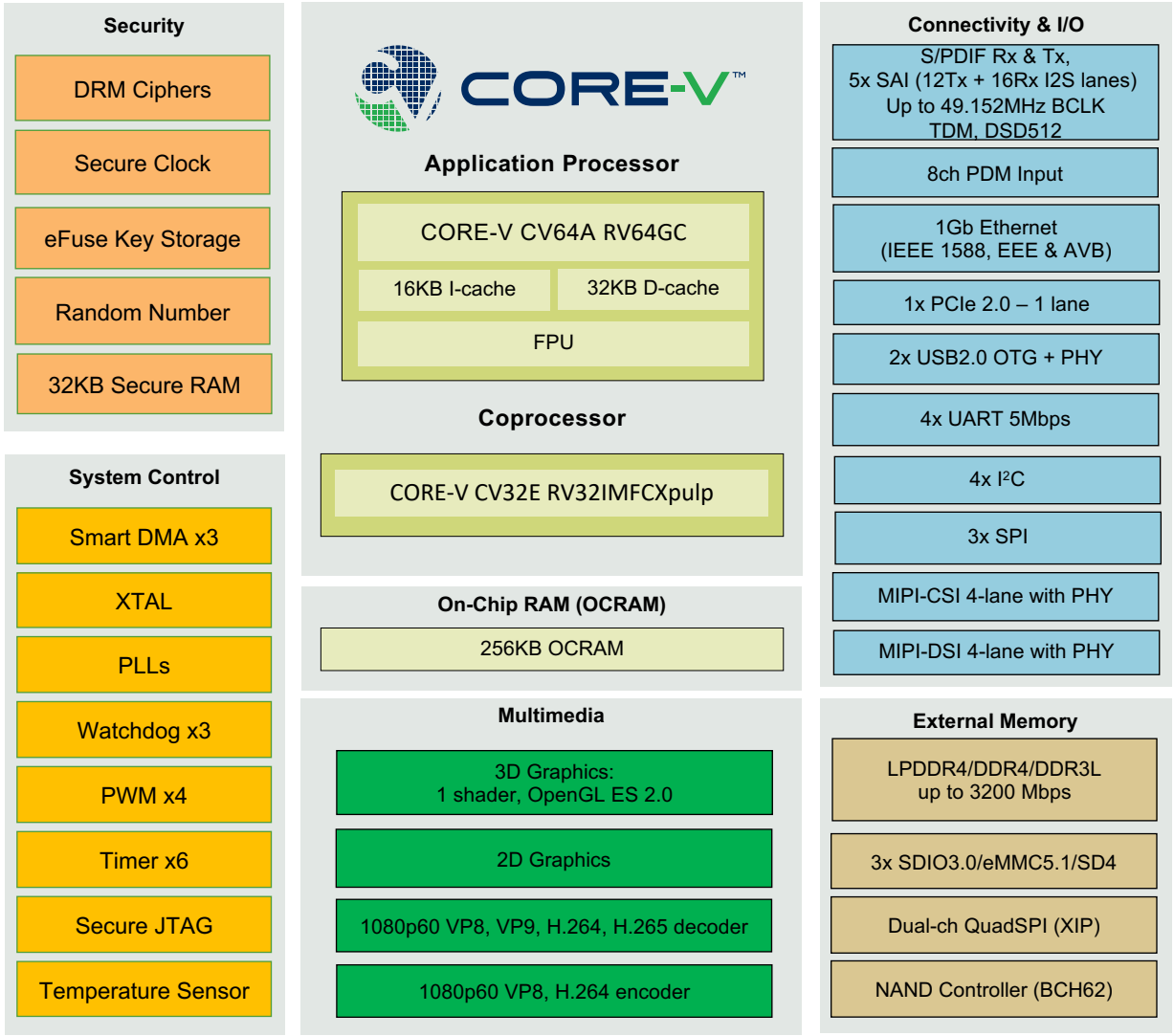

© OpenHW Group

CV64A Processor IP

- CV64A application 64bit RV64GC processor core IP (Ariane core)
- Linux Capable
  - Tightly integrated D$ & I$
  - M, S & U privilege modes
  - TLB, SV39
  - Hardware PTW
- Optimized for performance
  - Frequency: 1.5GHz
  - Area:~175kGE
  - Critical path: ~25 logic levels

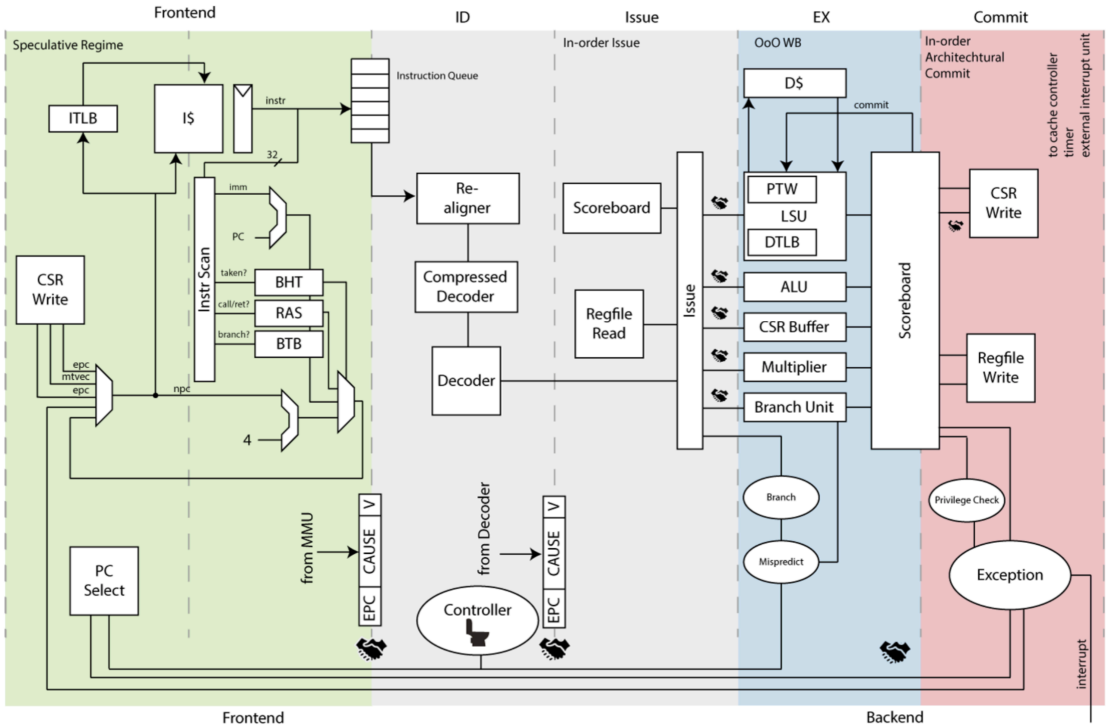

- 6-stage pipeline
  - In-order issue
  - Out-of-order write-back
  - In-order commit

© OpenHW Group

CV32E Processor IP

- CV32E embedded 32bit RV32IMFCXpulp processor core IP (RI5CY core)
  - 4-stage pipeline
  - 70K GF22 nand2 gate equivalents gate + 30KGE for FPU
  - Coremark/MHz 3.19
- Includes various extensions
  - pSIMD, Fixed point, Bit manipulations, HW loops
- Silicon Proven
  - SMIC130, UMC65, TSMC55LP, TSMC40LP, GF22FDX

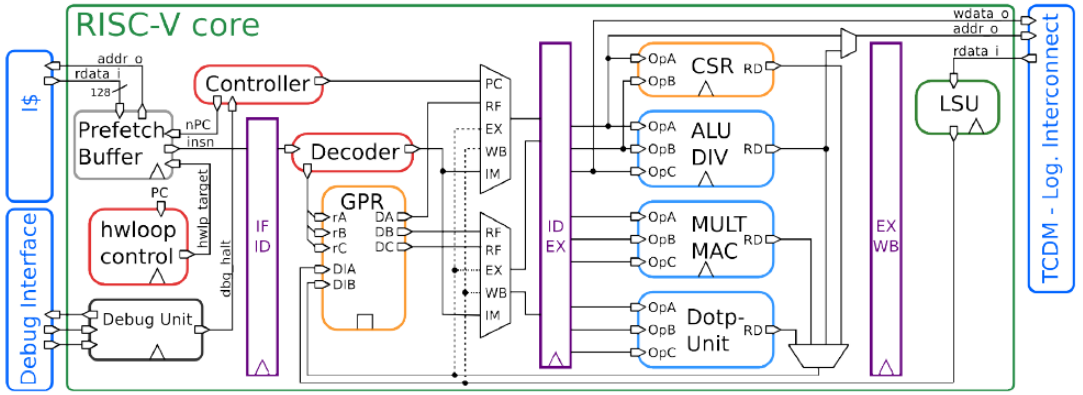

- Floating Point Unit
  - Iterative DIV/SQRT (9 cycles)
  - Parametrizable latency for MUL, ADD, SUB, Cast
  - Single cycle load, store

© OpenHW Group

CORE-V™ Chassis Ecosystem

CORE-V™

Alibaba Group 阿里巴巴集团

Alibaba Group 阿里巴巴集团

EMBECOSM®

GREENWAVES TECHNOLOGIES

BTA DESIGN SERVICES your project, our team

HUAWEI

NXP

SILICON LABS

CORE-V™

IBM Cloud

bluespec

imperas

metrics

ETH zürich

FUTUREWEI

GREENWAVES TECHNOLOGIES

HUAWEI

MYTHIC

NXP

SILICON LABS

THALES

ultraSoC

VeriSilicon

CV32 & CV64 Cores

System Verilog RTL

onespin

Cloud Based Verification

RTL Simulation Formal Methods Stimulus

Device Under Test

GCC / LLVM & OS ports

MPW Layout & Fab

CMC MICROSYSTEMS

VeriSilicon

Eval Boards

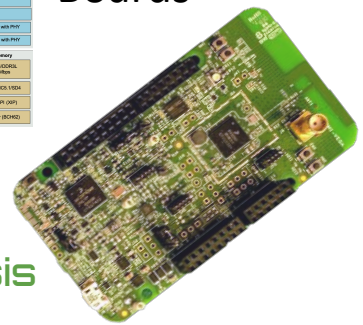

CORE-V Chassis

Protos

CMC MICROSYSTEMS

NXP

ultraSoC

© OpenHW Group

CORE-V™ Chassis – Possible Processor Complex – CV64 + CV32 cluster

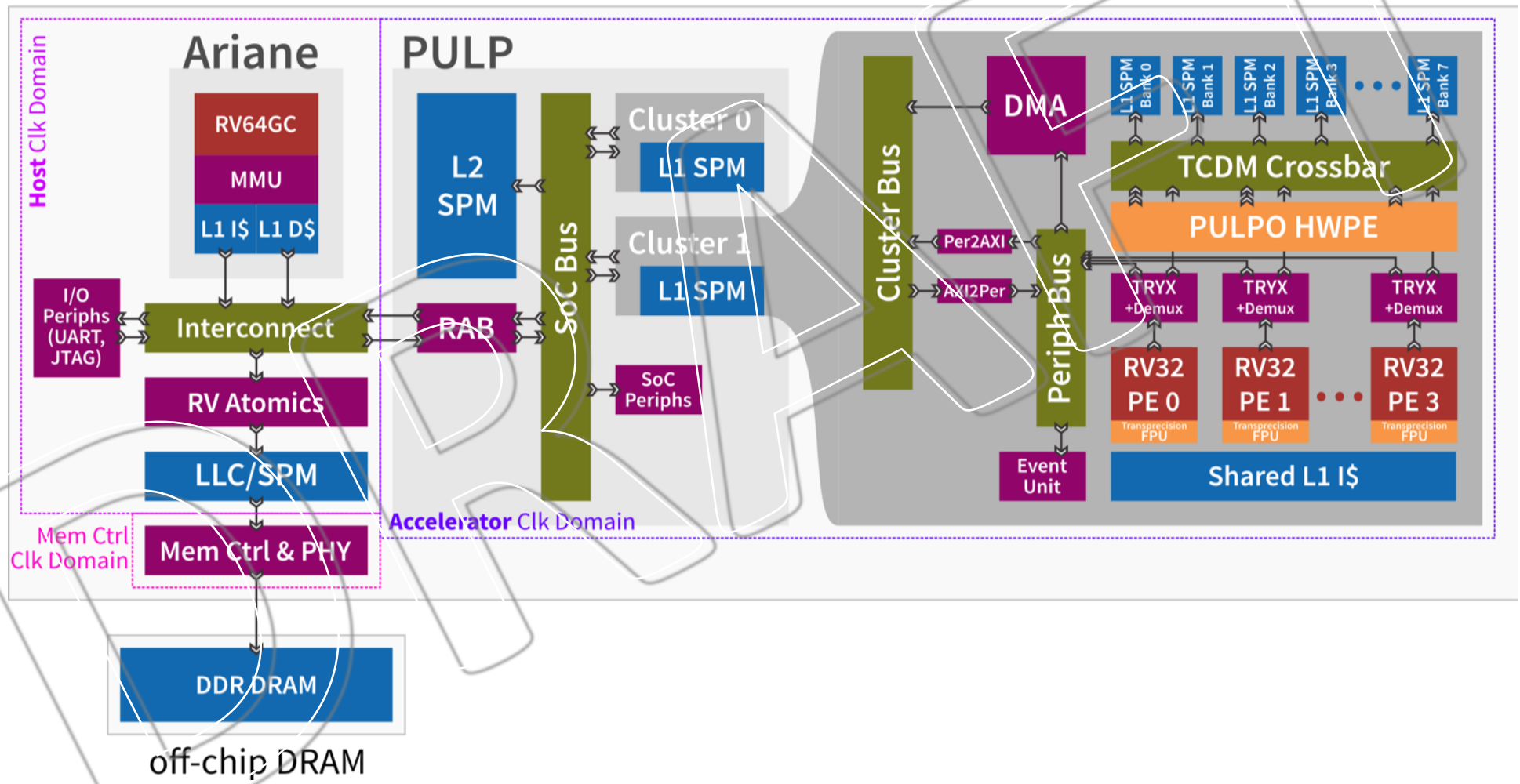

CORE-V™ Chassis – Possible Processor Complex – CV64A + CV64V Vector Core

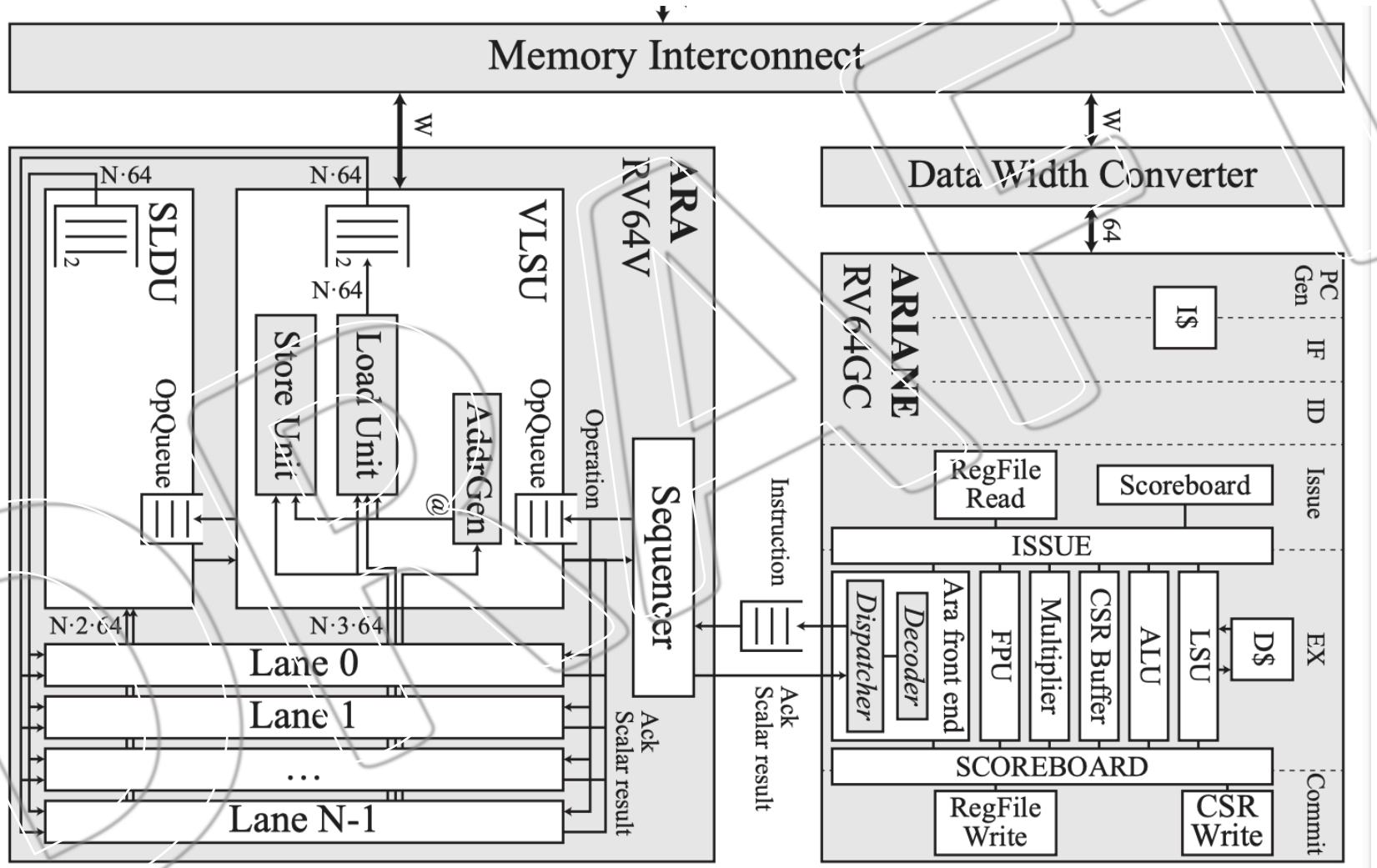

CORE-V Chassis – Call for Participation

- Join the OpenHW Group to drive the CORE-V Chassis project
  - CV64A and CV32 verification test bench
  - CV64A bus interfaces and cache coherency support
  - CV64A IPC improvements
  - CV64A and CV32E OS porting / development environment
  - … and more …

© OpenHW Group